Accuphase

INTEGRATED STEREO AMPLIFIER E-202

Service Information

STARTING WITH SERIAL NO. E4Y001

TABLE OF CONTENTS

EXTERNAL VIEW 1
INTERNAL VIEW 2
EXPLODED VIEW 3
MISCELLANEOUS 4
HOW TO REPLACE THE FOLLOWING PARTS 4
EQUALIZER AMP. ASSEMBLY 5
MAIN DRIVE ASSEMBLY 6
TONE CONTROL ASSEMBLY 7
METER CIRCUIT ASSEMBLY 7
DISC INPUT ASSEMBLY 7
TONE AMP. ASSEMBLY 8
FILTER AMP. ASSEMBLY 8
POWER SUPPLY ASSEMBLY 9
PUSH-BUTTON SWITCH ASSEMBLY 10
TRANSISTOR LEADS 10
CIRCUIT DESCRIPTION 11
PROTECTION CIRCUIT DESCRIPTION 12
CHECKING THE POWER SUPPLY 12
SCHEMATIC DIAGRAM 13
SPECIFICATIONS 15

BLOCK DIAGRAM

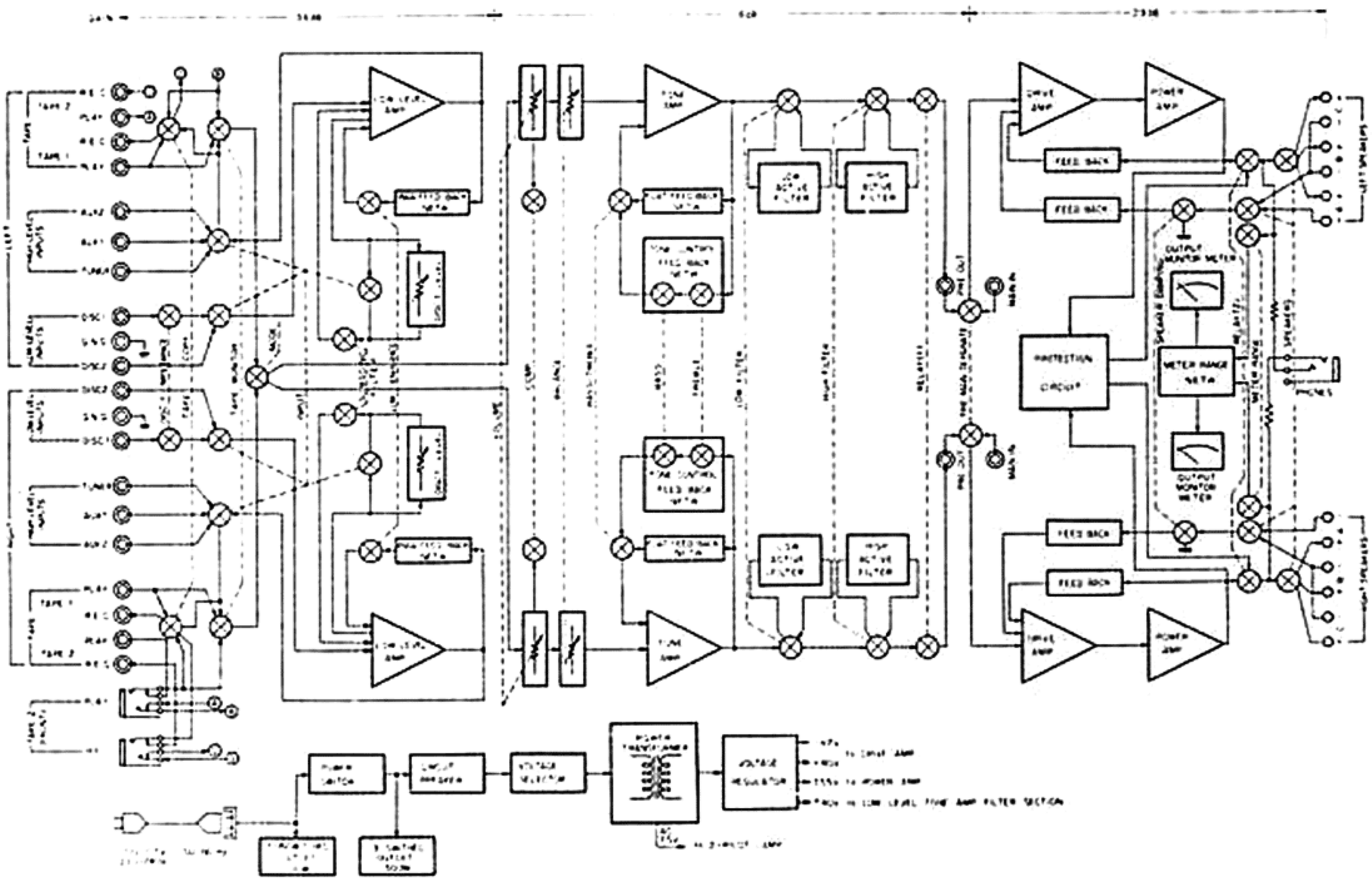

EXTERNAL VIEW

●FRONT

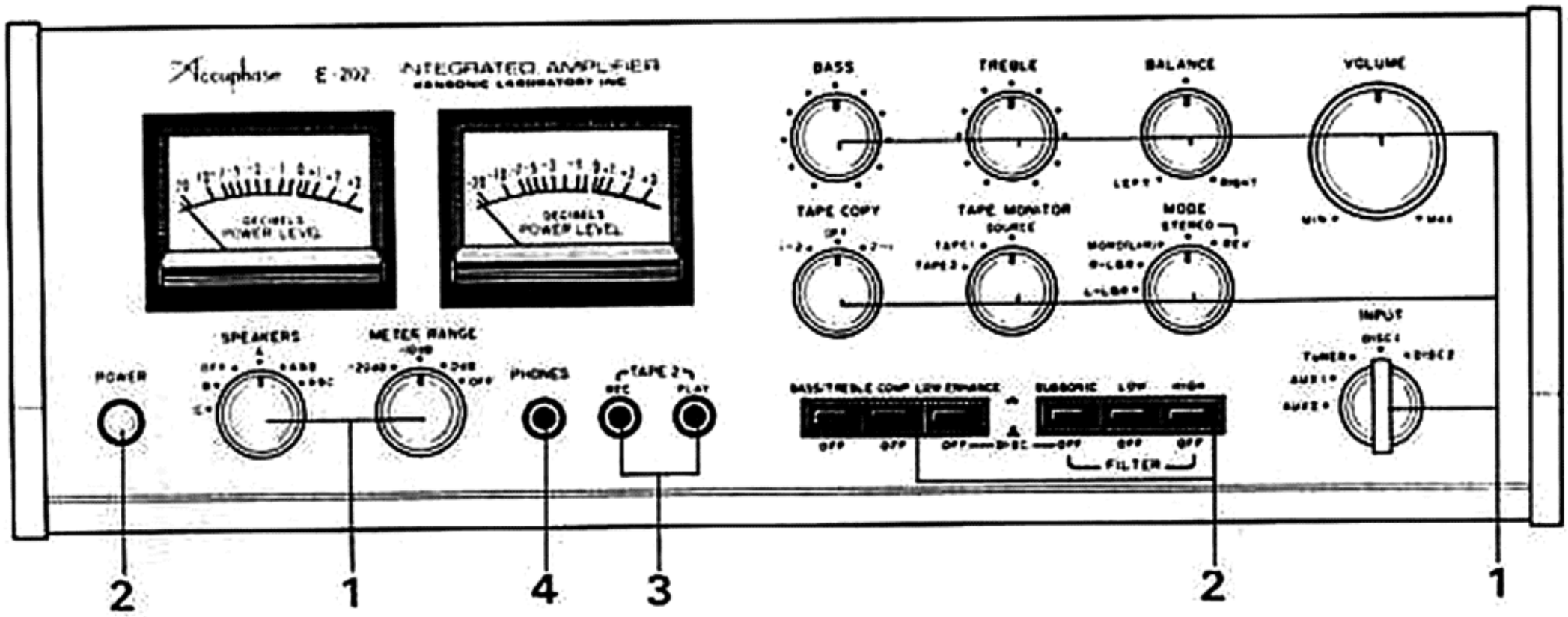

●REAR

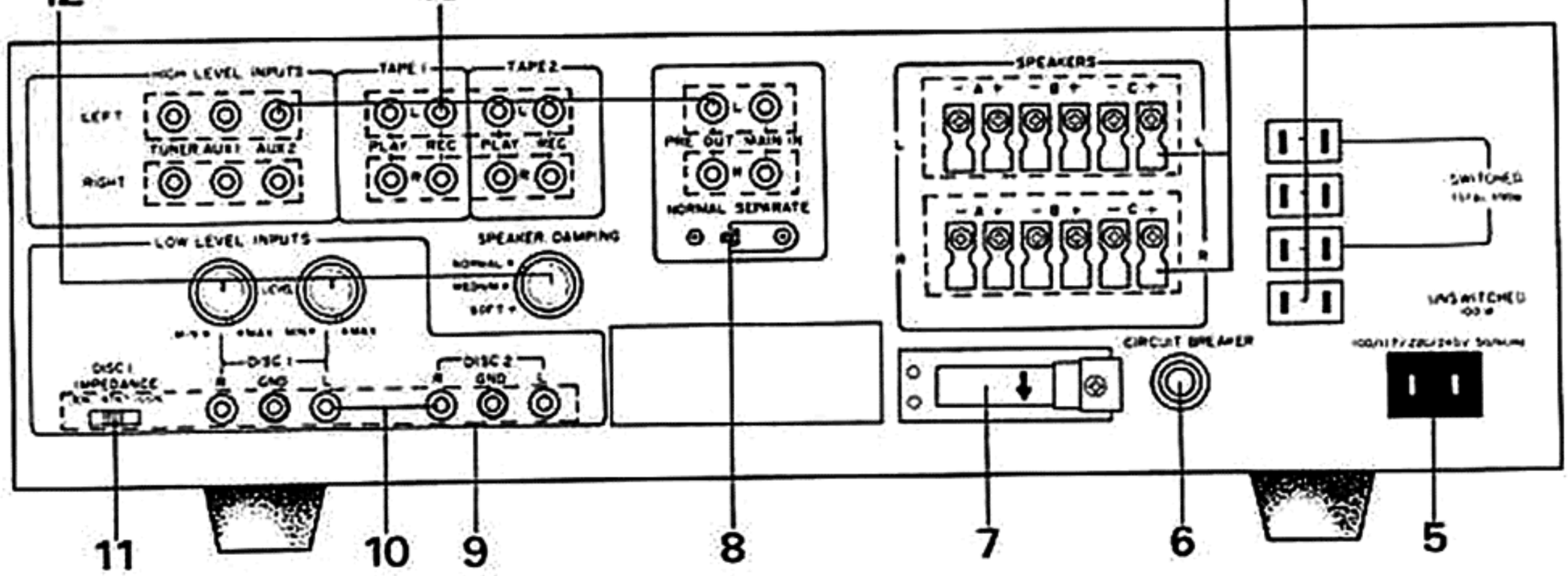

●PARTS LIST

No	Description	Part No.	Remarks
1	Knob for		Ref. EXPLODED VIEW⑨⑪
	VOLUME	381-4003-14	
	INPUT	381-3002-04	
	BALANCE, METER RANGE, BASS, TREBLE, MODE, TAPE COPY, TAPE MONITOR, SPEAKERS.	381-2603-14	
	Spacer	250-1011-04	18mm dia.
2	Push-button for		Ref. EXPLODED VIEW⑩
	Power Switch	389-1202-04	
	Push Switch Assembly	389-5001-14	
3	Tape Jack	302-1301-10	for TAPE2
4	Phone Jack	302-1201-00	
5	AC Connector Plug	301-3201-00	
6	Circuit Braker	311-0051-10	5A at 220, 240V (Red or Red dot)
		311-0101-10	10A at 100, 117V (Black or White)

No	Description	Part No.	Remarks
7	Voltage Selector Jack	302-4001-00	
	Voltage Selector Plug	301-4001-00	
	Voltage Selector Fixed Bracket	248-0001-14	
8	Slide Switch	350-1201-00	for Separate SW.
9	DISC Input Assembly	716-0009-00	
10	Pin Jack	302-0901-10	2-pin with ground terminal.
11	Slide Switch	350-0202-00	for Impedance Selector.
12	Knob	385-1801-04	for DISC LEVEL & DAMPING Selector.
13	Pin Jack	302-0401-00	4-pin
	Pin Jack	302-0301-00	3-pin
	Pin Jack	302-0201-00	2-pin
14	Speaker Terminal	313-5062-00	
15	AC Outlet	305-1201-00	

INTERNAL VIEW

● TOP SIDE

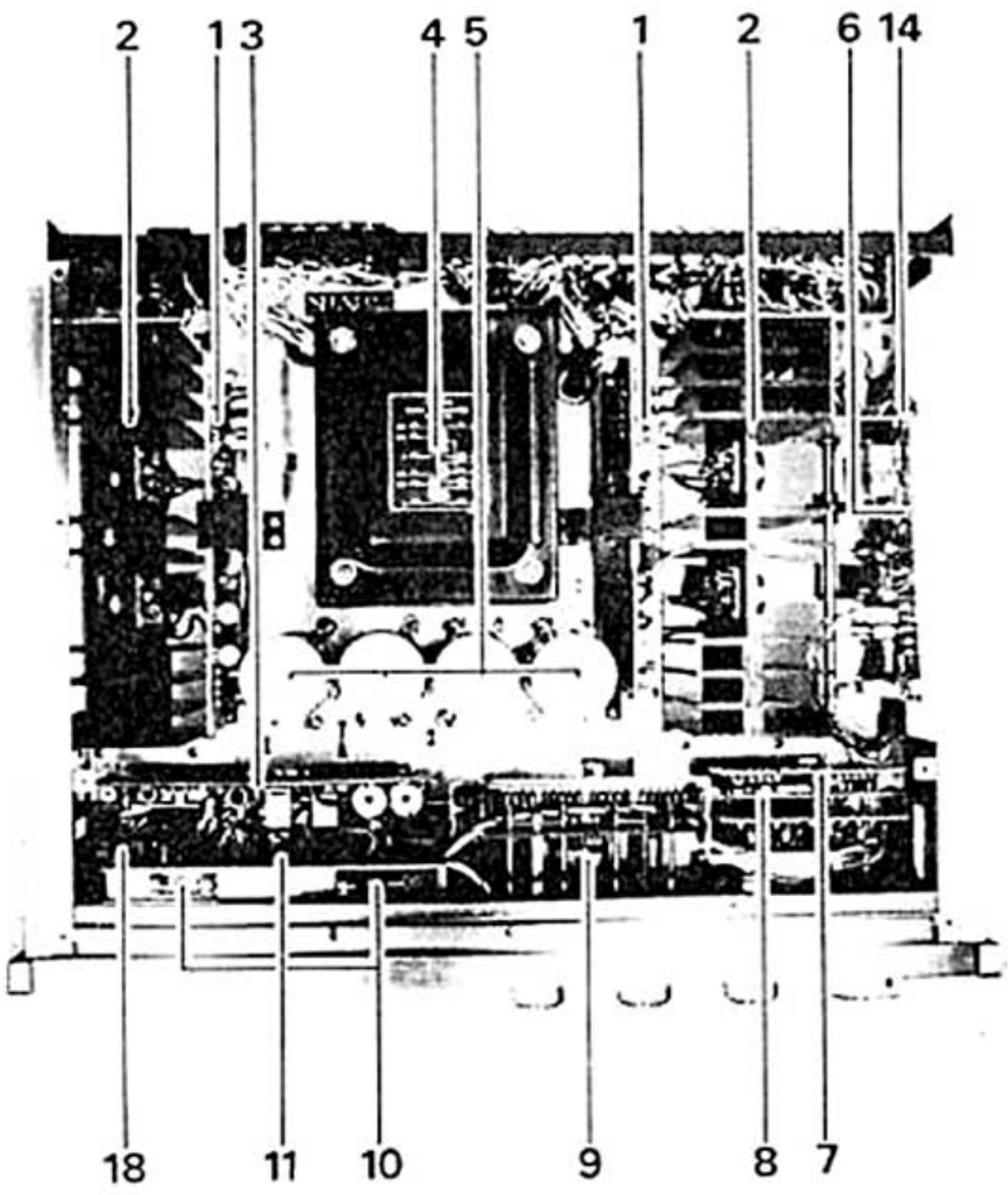

● BOTTOM SIDE

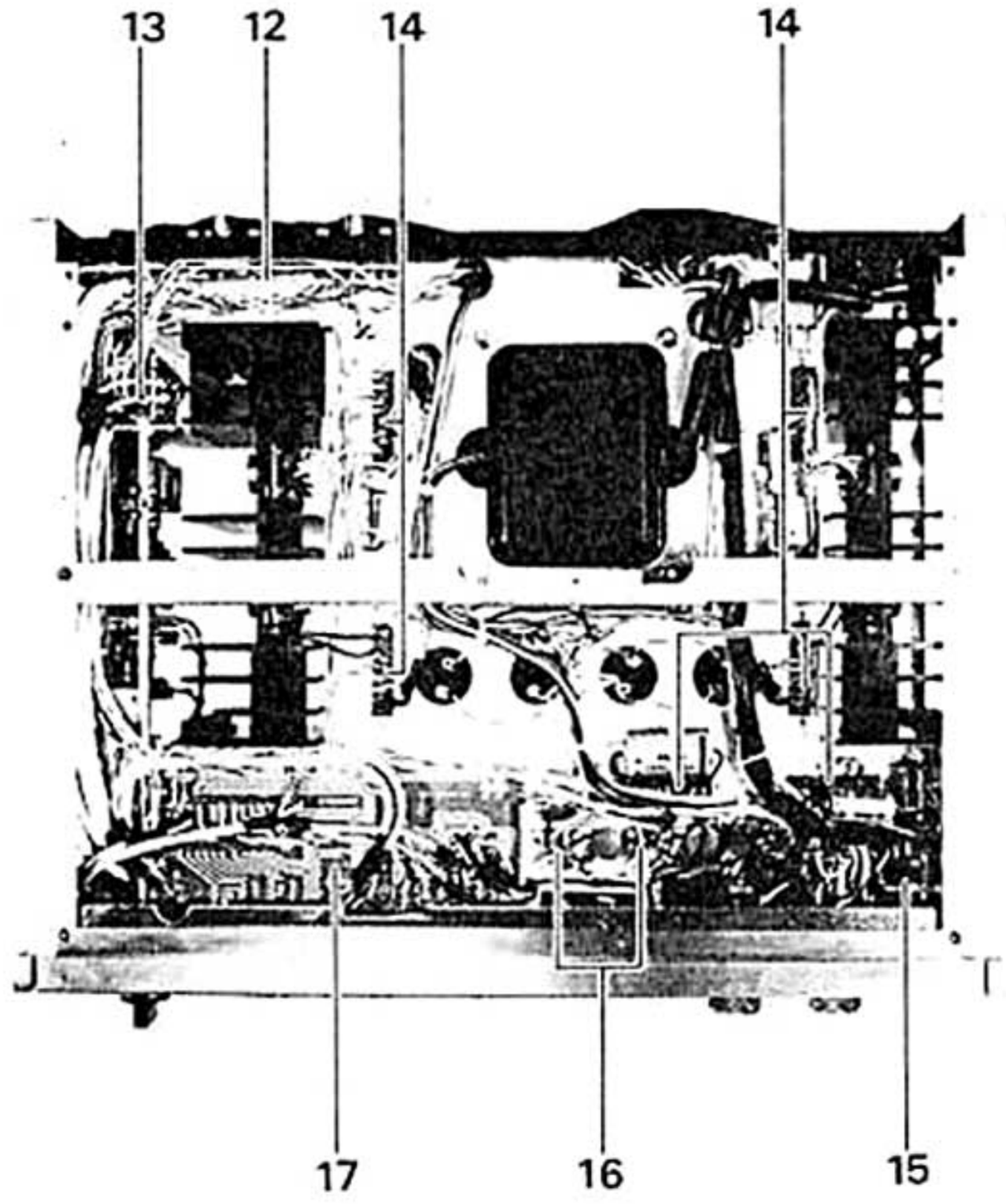

● PARTS LIST

No	Description	Part No.	Remarks
1	Main Drive Assembly	710-0002-00	
	Printed Circuit Board Fixed Bracket	248-0014-04	
	Hexa Boss	251-6951-14	
2	Heat Sink	240-0002-02	for Power TR.
	Power Transistor	2SA679-R or Y	
	Power Transistor	2SC1079-R or Y	
	Transistor Socket	300-0001-00	for Power TR.
	Transistor Insulation	318-0001-00	
	Varistor	STV-411	
3	Power Supply Assembly	719-0004-00	
4	Power Transformer	510-3001-00	
5	Electrolytic Capacitor	CE62W1J1031.G	10000μF 63WV
6	Equalizer AMP. Assembly	711-0002-00	
7	Tone AMP. Assembly	712-0002-10	
8	Filter AMP. Assembly	714-0004-00	
9	Tone Control Assembly	716-0006-00	

No	Description	Part No.	Remarks
10	Pilot Lamp 8V 300mA	176-5201-00	
	Pilot Lamp Socket	306-1001-00	
11	Meter Circuit Assembly	716-0008-00	
	Fuse (1A)	310-0101-00	3pcs.
12	DISC Input Assembly	716-0009-00	Ref. EXTERNAL VIEW②
13	Rotary Switch	332-6201-00	Ref. EXPLODED VIEW⑪
14	Printed Circuit Board Connector	303-1001-00	10-pin
	Printed Circuit Board Connector	303-1401-00	14-pin
15	Power Push Switch	354-1003-00	Ref. EXPLODED VIEW⑫
16	Diode	1S2724(+)(−)	
	Transistor Socket	300-0101-00	for 1S2724
	Transistor Insulator	318-0101-00	for 1S2724
17	Push-button Switch Assembly	716-0007-10	Ref. EXPLODED VIEW⑬
18	Relay	362-2401-00	
	Relay Fixed Bracket	247-0044-14	
	Socket	305-3401-10	

EXPLODED VIEW

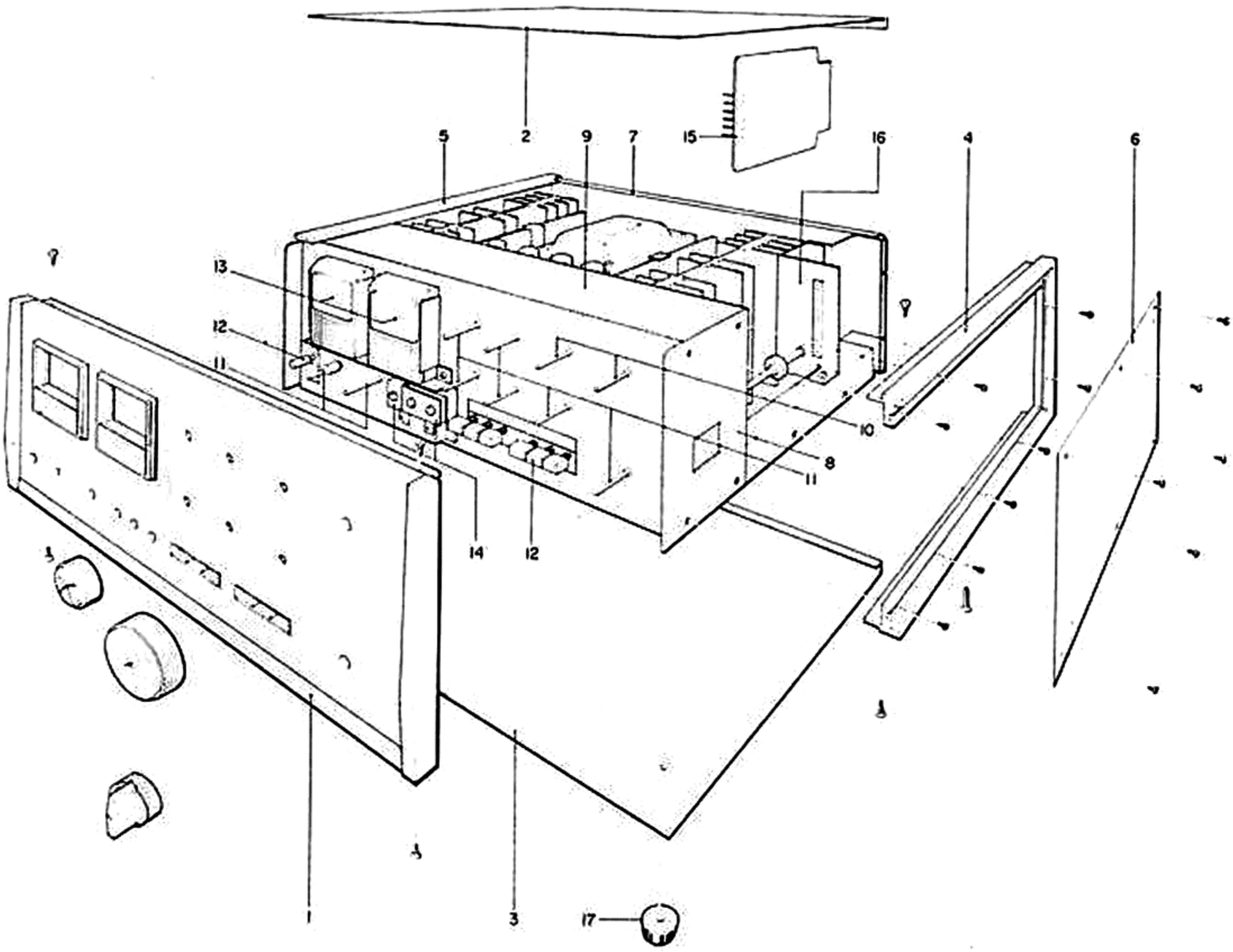

● PARTS LIST

No	Description	Part No.	Remarks
1	Panel Assembly	130-0004-03	
	Front Panel	131-0004-02	
	Panel End Cap (L)	132-0005-14	
	Panel End Cap (R)	132-0006-14	
	Panel End Spacer	250-1001-14	
	Meter Frame	113-0006-03	
	Push-button Frame	113-0008-14	for Push Switch Assembly
	Push-button Frame	113-0007-04	for Power Switch
	Jack Frame	113-0009-14	
2	Top Plate	150-0003-02	
3	Bottom Plate	155-0003-22	
4	Frame Assembly (R)	112-0002-22	
	Frame D	112-1004-23	Upper
	Frame E	112-1005-23	Lower
	Frame C	112-1003-04	Back
	Frame Fixed Bracket	244-0001-04	
	Screw (Flat Head B Type Self Tapping)	613-0308-01	3×8mm
5	Frame Assembly (L)	112-0001-22	
	Frame A	112-1001-23	Upper
	Frame B	112-1002-23	Lower
	Frame C	112-1003-04	Back
	Frame Fixed Bracket	244-0001-04	
	Screw (Flat Head B Type Self Tapping)	613-0308-01	3×8mm
6	Side Plate	151-0002-02	
7	Rear Panel	135-0004-32	
8	Sub Chassis	111-3001-22	
9	Sub Chassis Shield Cover	230-0011-02	

No	Description	Part No.	Remarks
10	Variable Resistor		Ref. EXTERNAL VIEW①
	VOLUME	573-2001-00	
	BALANCE	573-2303-00	
	DISC LEVEL	573-1103-10	Located Rear Panel.
11	Rotary Switch		Ref. EXTERNAL VIEW①
	INPUT	332-6201-00	
	Shaft	203-5002-04	
	Shaft Coupling	282-0001-10	
	MODE	332-5301-00	
	TAPE COPY	332-3001-00	
	TAPE MONITOR	332-3001-00	
	BASS	336-1502-00	Ref. Tone Control Assembly
	TREBLE	336-1503-00	Ref. Tone Control Assembly
	METER RANGE	332-4003-00	
	SPEAKERS	333-6001-00	
	Shaft	203-5001-00	
	SPEAKER DAMPING	333 3002-00	Ref. EXTERNAL VIEW②
12	Push-button Switch for		Ref. EXTERNAL VIEW②
	Power Switch	354-1003-00	
	Push Switch Assembly	354-6402-00	
13	Power Meter	178-2002-10	
	Meter Fixed Bracket	246-0003-03	
14	Phone Jack Fixed Bracket	247-0028-04	Ref. EXTERNAL VIEW①①
	Tape Jack Fixed Bracket	247-0029-10	
15	Equalizer AMP. Assembly	711-0002-00	
16	Rotary Switch Fixed Bracket	247-0025-03	
17	Plastic Foot	238-0001-14	

● MISCELLANEOUS

No.	Description	Part No.	Remarks
Q3, 4, 7, 8	Transistor	2SA679 - R - K	
Q1, 2, 5, 6	Transistor	2SC1079 - R - K	
D1	Diode	IS2724 (+)	
D2	Diode	IS2724 (−)	
D5	Diode	IBZ - 61	
D3, 4	Varistor	STV - 4H	
	Screw for		(1)Binding Head B Type Self Tapping Screw (2)Pan Head B Type Self Tapping Screw (3)Pan Head ISO Metallic Screw (4)Flat Head B Type Self Tapping Screw
	Top Plate	614 - 0308 - 02	3×8mm (1) 6pcs.
	Nylon Washer	637 - 1031 - 50	6pcs.
	Front Panel	613 - 0308 - 01	3×8mm (4) 4pcs.
	Panel End Cap	617 - 0315 - 01	3×15mm (2) 4pcs.
	Frame Assembly	613 - 0308 - 01	3×8mm (4) L 10pcs. R 8pcs.
	Frame Assembly	603 - 0410 - 01	4×10mm 4pcs.
	Side Plate	614 - 0308 - 02	3×8mm (1) 12pcs.
	Rear Panel	614 - 0308 - 02	3×8mm (1) 10pcs.
	Bottom Plate	614 - 0308 - 02	3×8mm (1) 6pcs.
	Power Transistor	600 - 0312 - 01	3×12mm (3) 16pcs.
	Diode (IS2724)	600 - 0308 - 01	3×8mm (3) 4pcs.
	Plastic Foot	600 - 0414 - 01	4×14mm (3) 4pcs.
R001	Oxide Metal Film Resistor	RS143FA201J	200Ω ± 5% 3.16W
R002	Oxide Metal Film Resistor	RS143AA272J	2.7kΩ ± 5% 1W

No	Description	Part No.	Remarks
R003, 004 101, 102	Carbon Film Resistor	RD142HA183J	18kΩ ± 5% ½W
R103 - 106	Carbon Film Resistor	RD142HA472J	4.7kΩ ± 5% ½W
R201, 202	Carbon Film Resistor	RD142HA223J	22kΩ ± 5% ½W
R319, 320 323, 324	Carbon Film Resistor	RD142HA222J	2.2kΩ ± 5% ½W
R301, 302	Cement Coated Wire Wound Resistor	RW983HG100J	10Ω ± 5% 5W
R303 - 306	Cement Coated Metal PlateResistor	RW993DR22J	0.22Ω ± 5% 2W
R307, 308	Oxide Metal Film Resistor	RS143DA821J	820Ω ± 5% 2W
R309, 310	Carbon Film Resistor	RD142HA821J	820Ω ± 5% ½W
R311, 312	Carbon Film Resistor	RD142HA162J	1.6kΩ ± 5% ½W
R313, 314	Carbon Film Resistor	RD142HA681J	680Ω ± 5% ½W
R315, 316	Carbon Film Resistor	RD142HA751J	750Ω ± 5% ½W
R317, 318	Carbon Film Resistor	RD142HA102J	1kΩ ± 5% ½W
R321, 322	Carbon Film Resistor	RD142HA682J	6.8kΩ ± 5% ½W
R325, 326	Wire Resister	RB143FAR033L	0.033Ω 3.16W
C001 - 004	Electrolytic Capacitor	CE62W1J103L.G	10000μF 63WV
C005	Electrolytic Capacitor	CE02W2A 331	330μF 100WV
C006 - 009	Ceramic Capacitor	CK45F2H103P	0.01μF $^{+100\%}_{-0\%}$ 500WV
C103 - 109	Ceramic Capacitor	CK45F2H102P	1000pF $^{+100\%}_{-0\%}$ 500WV
C301, 302	Metallized Film Capacitor	CQ93M2E104M	0.1μF ±20% 250WV
C010	Mylar Film Capacitor	CQ93M2E103MUL	0.01μF
	Power Supply Cord	680 - 2201 - 00	Accessory
	Carton Box		
	Outer Box	800 - 0004 - 00	
	Inner Box	801 - 0004 - 00	
	Front Protector	803 - 0006 - 00	
	Rear Protector	803 - 0005 - 00	
C112, 113	Mylar Film Capacitor	CQ93M1H104M	0.1μF ±20% 50WV
C115	Tantalum Solid Capacitor	CS15E1C100M	10μF ±20% 16WV

HOW TO REPLACE THE FOLLOWING PARTS

POWER TRANSISTOR Ref: Internal View 2 6
Exploded View 6 15

Left Channel
1. Remove the left Side Plate held by 6 screws.
2. Transistors located above the heat sink can be replaced after removing the transistor locking screws.

Right Channel
1. Remove the Top Plate, (6 screws)
2. Remove the Side Plate (6 screws).
3. Remove the L-shaped bracket (adjacent to the Side Plate) that holds the Equalizer Amp Assembly in place. Take out Assembly.
4. Replace transistor after taking off transistor locking screws.

METER Ref: Exploded View 13

1. Remove the Top Plate (6 screws).
2. Remove front panel knobs (10).
3. Remove Front Panel (4 locking screws).
4. Remove the 4 screws holding the Meter Fixed Bracket which can then be taken out toward the front.
5. Meter can be replaced after unscrewing the 4 locking nuts located above the Meter Fixed Bracket.

FRAME Ref. Exploded View 4 5 6

1. Remove Top, Bottom and Side Plate (6 screws each).
2. Remove Frame locking screws (9 on right, 11 on left). (note; the corner of the Frame Assembly has a reinforcing 'Frame Fixed Plate' held in place by 6 screws.)
3. Frame can now be taken off the unit and any section can be replaced, after removing it from the Frame Fixed Bracket.

RELAY Ref. Internal View 18

1. Remove Top and left Side Plate (6 screws each).
2. Remove Power Supply Assembly.
3. The Relay Fixed Bracket is fixed to the top of the Sub Chassis with 2 screws. The Relay section can be taken off after removing these screws.

EQUALIZER AMP. ASSEMBLY

●PRINTED CIRCUIT BOARD

*Printed circuit board as seen from the reverse side.

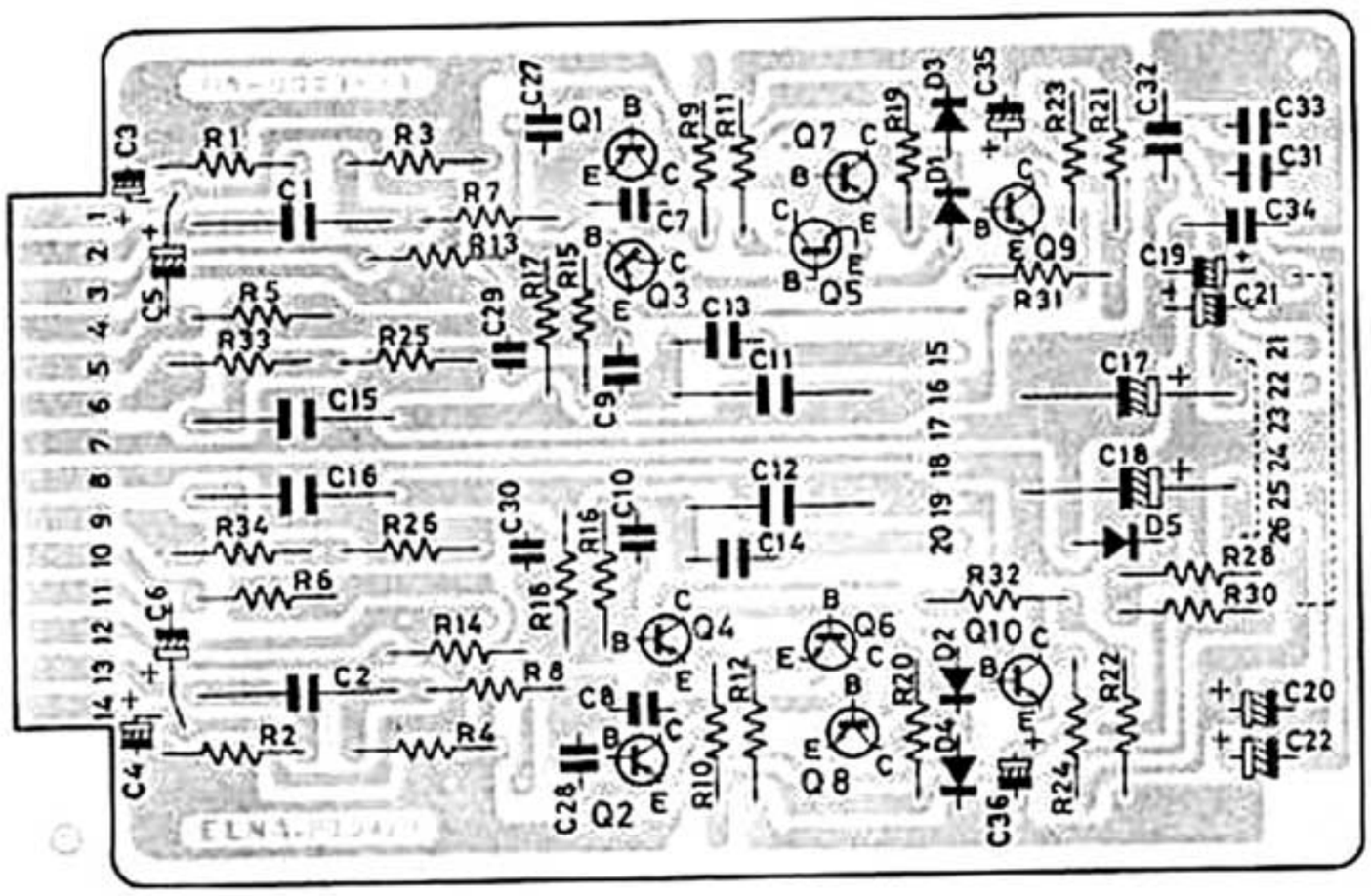

(711-0002-10)

Effective from Serial No.K5U351or K1U601

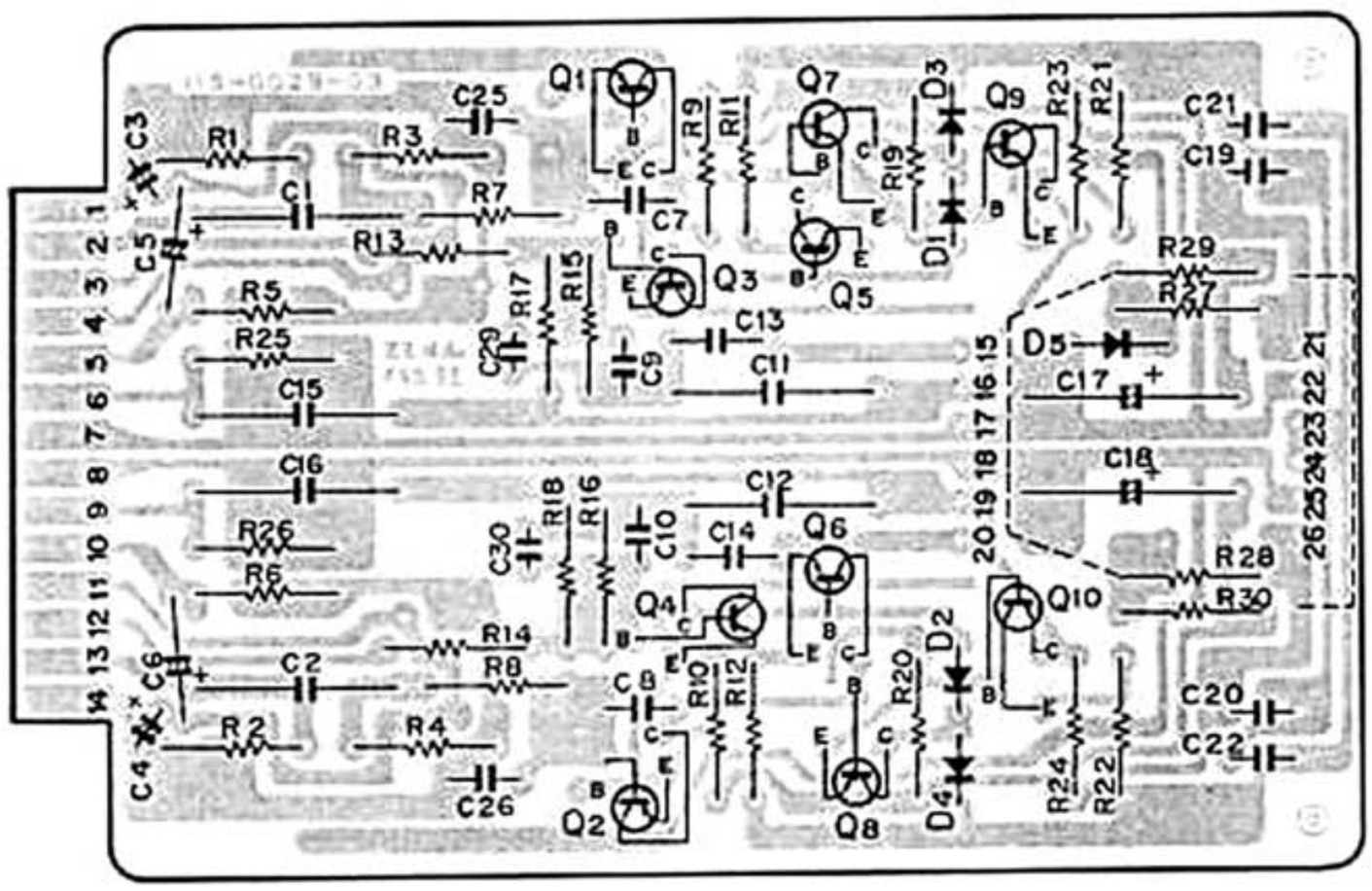

(711-0002-00)

●PARTS LIST

No.	Description	Part No.	Remarks
	Connector plug	304-0603-00	
Q1-4, 7, 8	Transistor	2SA856A-GR or BL	
Q5, 6	Transistor	2SC1746A-GR or BL	
Q9, 10	Transistor	2SC1451-B, V or S	
D1-4	Silicon diode	1S1555	
D5	Zener Diode	XZ-122	
R1, 2	Carbon Film Resistor	RD142HA114J	110kΩ ±5% ½W
R3, 4, 25, 26	Carbon Film Resistor	RD142HA914J	910kΩ ±5% ½W
R5, 6	Carbon Film Resistor	RD142HA104J	100kΩ ±5% ½W
R7, 8	Carbon Film Resistor	RD142HA182J	1.8kΩ ±5% ½W
R9, 10	Metal Film Resistor	RN142HA4752F	47.5kΩ ±1% ½W
R11, 12	Carbon Film Resistor	RD142HA392J	3.9kΩ ±5% ½W
R13, 14	Carbon Film Resistor	RD142HA3921G	3.92kΩ ±2% ½W
R15, 16	Carbon Film Resistor	RD142HA1783F	178kΩ ±1% ½W
R17, 18	Metal Film Resistor	RN142HA245JL	2.4MΩ ±5% ½W
R19, 20	Carbon Film Resistor	RD142HA333J	33kΩ ±5% ½W
R21, 22	Carbon Film Resistor	RD142HA681J	680Ω ±5% ½W
R23, 24	Carbon Film Resistor	RD142HA682J	6.8kΩ ±5% ½W

No.	Description	Part No.	Remarks
R28	Carbon Film Resistor	RD142HA472J	4.7kΩ ±5% ½W
R30	Carbon Film Resistor	RD142HA470J	47Ω ±5% ½W
R31, 32	Carbon Film Resistor	RD142HA221J	220Ω ±5% ½W
R33, 34	Carbon Film Resistor	RD142HA201J	200Ω ±5% ½W
C1, 2, 15, 16	Metallized Film Capacitor	CQ93M2E105M	1μF ±20% 250WV
C3, 4	Tantalum Solid Capacitor	CS15E1C2R2M	2.2μF ±20% 16WV
C5, 6	Tantalum Solid Capacitor	CS15E1C4R7M	4.7μF ±20% 16WV
C7, 8, 27, 28	Mica Capacitor	CM93D2A050D	5pF ±0.5pF 100WV
C9, 10	Polystyrene Film Capacitor	CQ08S2B431G	430pF ±2% 125WV
C11, 12	Polystyrene Film Capacitor	CQ08S2B112G	1100pF ±2% 125WV
C13, 14	Polystyrene Film Capacitor	CQ08S2B201G	200pF ±2% 125WV
C17, 18	Electrolytic Capacitor	CE02W1C221	220μF 16WV
C19-22	Electrolytic Capacitor	CE04W1H100	10μF 50WV
C29, 30	Ceramic Capacitor	CC45SL1H270K	27pF ±10% 50WV
C31-34	Ceramic Capacitor	SC45F1H104Z	0.1μF +80% −20% 50WV
C35, 36	Electrolytic Capacitor	CE04W1A101	100μF 10WV
C37, 38	Polystyrene Film Capacitor	CQ08S2B220J	22pF ±5% 125WV
C39, 40	Metallized Film Capacitor	CQ91M2E103M	0.01μF ±20% 250WV

MAIN DRIVE AMP. ASSEMBLY (710-0002-00)

● PRINTED CIRCUIT BOARD

*Printed circuit board as seen from the reverse side.

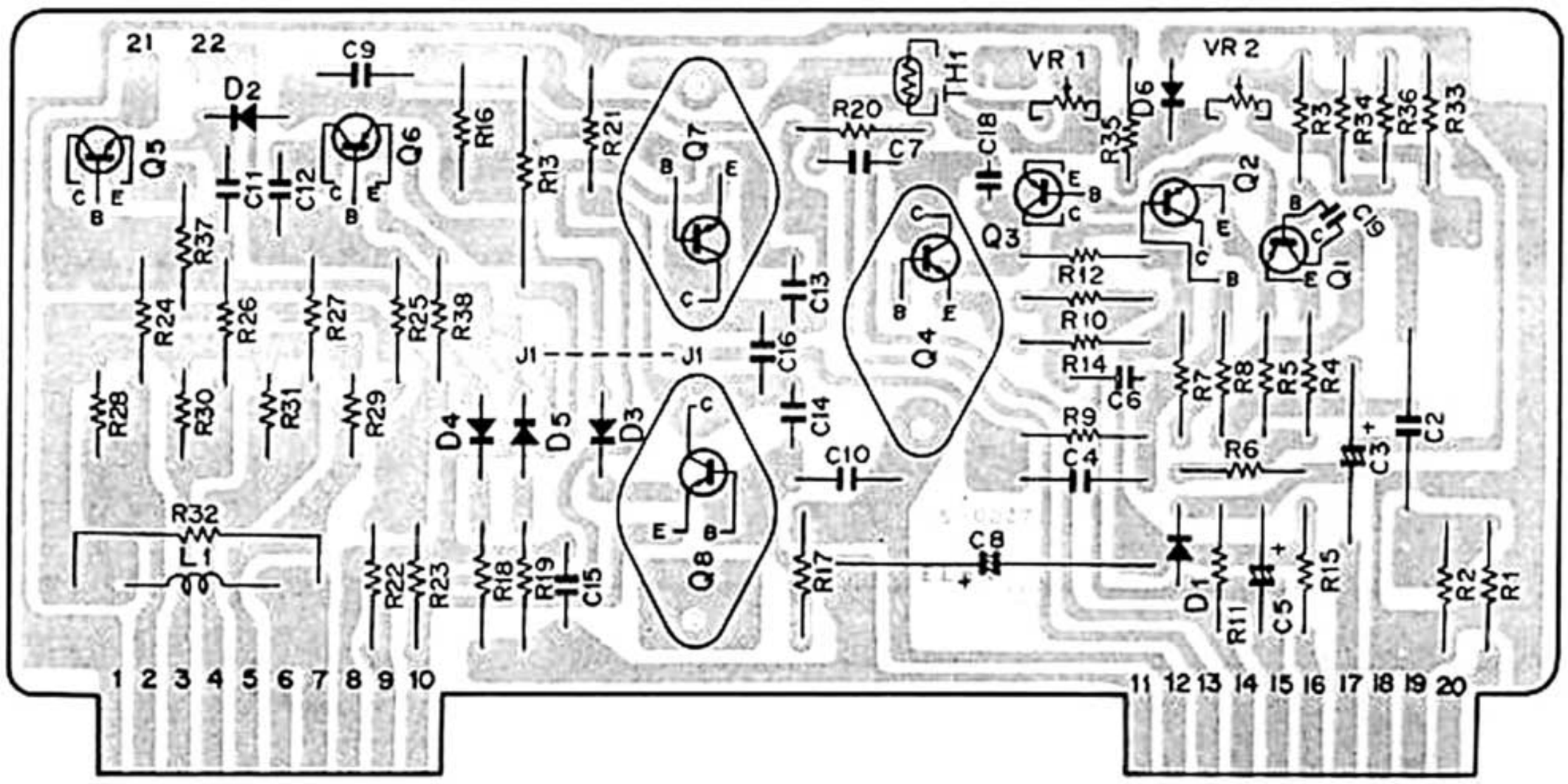

● PARTS LIST

No.	Description	Part No.	Remarks
Q1, 2	Transistor	2SA620-WLH5	
Q3	Transistor	2SC1451-G or B	
Q4	Transistor	2SC515-A	
Q5, 9	Transistor	2SC1746-GR	
Q6	Transistor	2SA856-GR	
Q7	Transistor	2SC1431-2-2	
Q8	Transistor	2SA762-2-2	
D1	Zener Diode	XZ-162	
D2, 3	Silicon Diode	1S1555	
D4, 5	Silicon Diode	1S1553	
TH1	Thermistor	5TP-31L	
L1	Choke Coil 2μH	506-0001-00	
VR1	Potentiometer 100ΩB	581-0121-00	for Bias Current Adj.
VR2	Potentiometer 4.7kΩB	581-0531-00	for Center Voltage Adj.
R1	Carbon Film Resistor	RD142HA472J	4.7kΩ ±5% ⅓W
R2	Carbon Film Resistor	RD142HA105J	1MΩ ±5% ⅓W
R3	Carbon Film Resistor	RD142HA304J	300kΩ ±5% ⅓W
R4, 5	Carbon Film Resistor	RD142HA101J	100Ω ±5% ⅓W
R6	Carbon Film Resistor	RD142HA183J	18kΩ ±5% ⅓W
R7	Carbon Film Resistor	RD142HA133J	13kΩ ±5% ⅓W
R8	Carbon Film Resistor	RD142HA2431G	2.43KΩ ±2% ⅓W
R18, 19	Carbon Film Resistor	RD142HA242J	2.4kΩ ±5% ⅓W
R9	Carbon Film Resistor	RD142HA1503G	150kΩ ±2% ⅓W
R10	Carbon Film Resistor	RD142HA222J	2.2kΩ ±5% ⅓W
R12, 6	Carbon Film Resistor	RD142HA102J	1kΩ ±5% ⅓W

No.	Description	Part No.	Remarks
R11	Oxide Metal Film Resistor	RS143AA302J	3kΩ ±5% 1W
R13	Oxide Metal Film Resistor	RS143FA562J	5.6kΩ ±5% 3.16W
R14	Carbon Film Resistor	RD142HA150J	15Ω ±5% ⅓W
R15	Oxide Metal Film Resistor	RS143AA182J	1.8kΩ ±5% 1W
R17	Carbon Film Resistor	RD142HA112J	1.1kΩ ±5% ⅓W
R22, 23	Oxide Metal Film Resistor	RS143AA560J	56Ω ±5% 1W
R24~27	Oxide Metal Film Resistor	RS143AA681J	680Ω ±5% 1W
R28~31	Cement Coated Metal Plate Resistor	RW993F1R0J	1Ω ±5% 3.16W
R32	Cement Coated Wire Wound Resistor	RW983HG100K	10Ω ±10% 5W
R33	Carbon Film Resistor	RD142HA103J	10kΩ ±5% ⅓W
R34	Carbon Film Resistor	RD142HA121J	120Ω ±5% ⅓W
R36	Carbon Film Resistor	RD142HA512J	5.1kΩ ±5% ⅓W
R37, 38	Carbon Film Resistor	RD142HA4R7J	4.7Ω ±5% ⅓W
C2	Metallized Film Cpacitor	CQ93M2E474M	0.47μF ±20% 250WV
C3	Electrolytic Capacitor	CE02W1A101	100μF 10WV
C4, 6	Mica Capacitor	CM93D2A050D	5pF±0.5pF 100WV
C5	Electrolytic Capacitor	CE04W1H010	1μF 50WV
C7, 11, 12	Ceramic Capacitor	CK45F1H473Z	0.047μF +80% −20% 50WV
C8	Electrolytic Capacitor	CE02W1J221	220μF 63WV
C9, 10	Polystyrene Film Capacitor	CQ08S2B331J	330pF ±5% 125WV
C13, 14	Mica Capacitor	CM93D2A151J	150pF ±5% 100WV
C15, 16	Ceramic Capacitor	CK45F2H103P	0.01μF +100% −0% 500WV
C18	Mica Capacitor	CQ93D2A100D	10pF ±0.5% 100WV
C19	Ceramic Capacitor	CC45SL1H100D	10pF ±5pF 50WV
	Nut	633-2031-01	3mm for Q4, 7, 8
	Lockwasher	639-2031-01	for Q4, 7, 8
	Pan Head ISO Metallic Screw	600-0312-01	3×12mm for Q4, 7, 8

TONE CONTROL SWITCH ASSEMBLY (716-0006-10)

●PRINTED CIRCUIT BOARD

*Printed circuit board as seen from the reverse side.

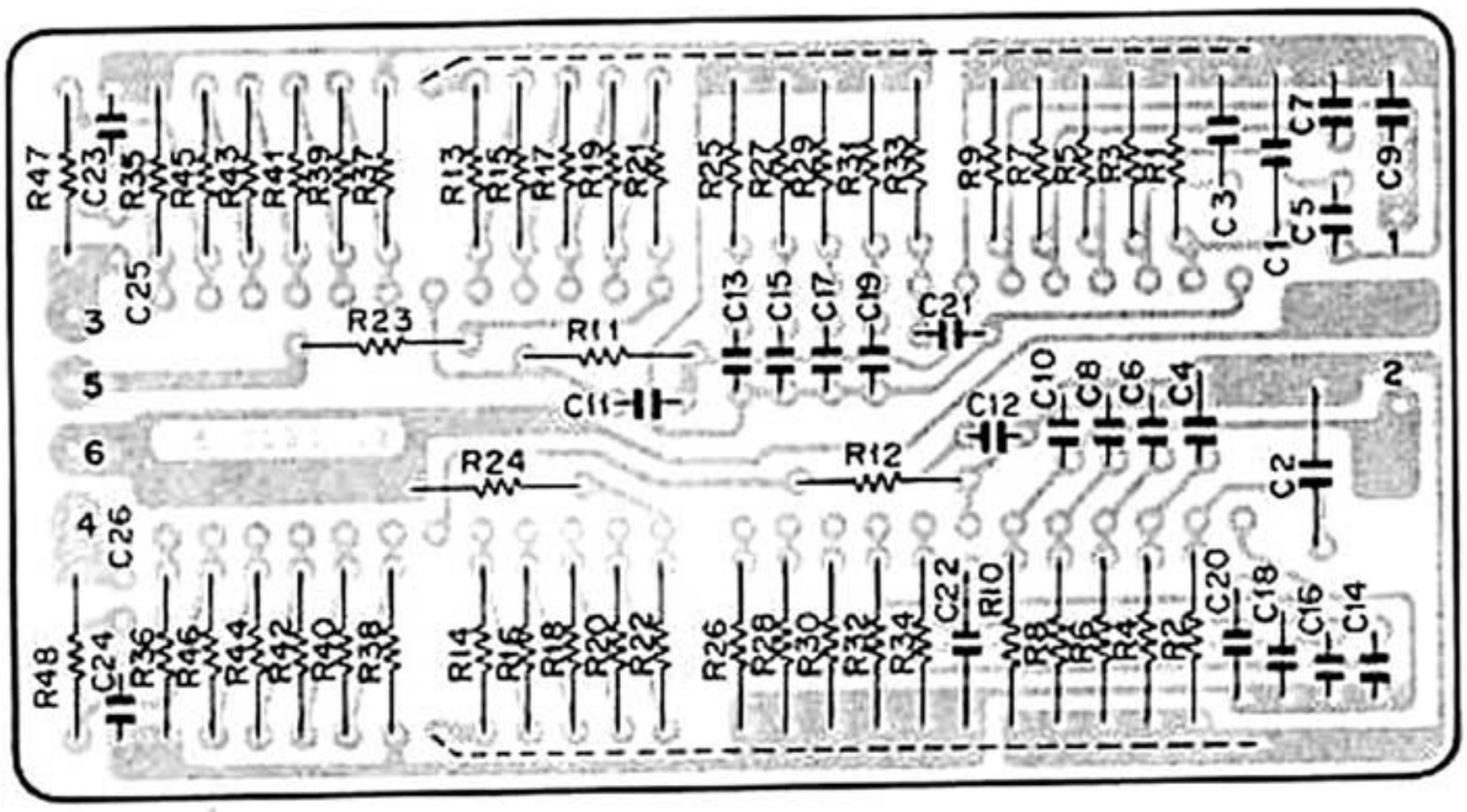

●PARTS LIST

No.	Description	Part No.	Remarks
SB-1	Rotary Switch	336-1502-00	for BASS
ST-1	Rotary Switch	336-1503-00	for TREBLE
R1, 2	Carbon Film Resistor	RD142HA512J	5.1kΩ ±5% ½W
R3, 4	Carbon Film Resistor	RD142HA133J	13kΩ ±5% ½W
R5, 6	Carbon Film Resistor	RD142HA333J	33kΩ ±5% ½W
R7, 8	Carbon Film Resistor	RD142HA104J	100kΩ ±5% ½W
R9, 10	Carbon Film Resistor	RD142HA164J	160kΩ ±5% ½W
R11, 12, 33-36	Carbon Film Resistor	RD142HA514J	510kΩ ±5% ½W
R13, 14	Carbon Film Resistor	RD142HA332J	3.3kΩ ±5% ½W
R15, 16	Carbon Film Resistor	RD142HA162J	1.6kΩ ±5% ½W
R17, 18	Carbon Film Resistor	RD142HA122J	1.2kΩ ±5% ½W
R19-22	Carbon Film Resistor	RD142HA102J	1kΩ ±5% ½W
R23, 24	Carbon Film Resistor	RD142HA132J	1.3kΩ ±5% ½W
R25, 26	Carbon Film Resistor	RD142HA274J	270kΩ ±5% ½W
R27, 28	Carbon Film Resistor	RD142HA273J	27kΩ ±5% ½W
R29, 30	Carbon Film Resistor	RD142HA753J	75kΩ ±5% ½W

No.	Description	Part No.	Remarks
R31, 32	Carbon Film Resistor	RD142HA184J	180kΩ ±5% ½W
R37, 38	Carbon Film Resistor	RD142HA203J	20kΩ ±5% ½W
R39, 40	Carbon Film Resistor	RD142HA113J	11kΩ ±5% ½W
R41, 42	Carbon Film Resistor	RD142HA912J	9.1kΩ ±5% ½W
R43, 44	Carbon Film Resistor	RD142HA682J	6.8kΩ ±5% ½W
R45, 46	Carbon Film Resistor	RD142HA622J	6.2kΩ ±5% ½W
R47, 48	Carbon Film Resistor	RD142HA222J	2.2kΩ ±5% ½W
C1, 2	Mylar Film Capacitor	CQ93M1H224J	0.22μF ±5% 50WV
C3, 4	Mylar Film Capacitor	CQ93M1H823J	0.082μF ±5% 50WV
C5, 6, 9, 10	Mylar Film Capacitor	CQ93M1H473J	0.047μF ±5% 50WV
C7, 8, 17, 18	Mylar Film Capacitor	CQ93M1H153J	0.015μF ±5% 50WV
C11-14	Mylar Film Capacitor	CQ93M1H822J	8200pF ±5% 50WV
C15, 16	Mylar Film Capacitor	CQ93M1H333J	0.033μF ±5% 50WV
C19, 20	Mylar Film Capacitor	CQ93M1H682J	6800pF ±5% 50WV
C21, 22	Mylar Film Capacitor	CQ93M1H222J	2200pF ±5% 50WV
C23, 24	Mylar Film Capacitor	CQ93M1H122J	1200pF ±5% 50WV

METER CIRCUIT ASSEMBLY (716-0008-00)

● PARTS LIST

No.	Description	Part No.	Remarks
	Fuse Holder	306-1001-00	
	Fuse	310-0101-00	1A
D1, 2, 3, 4, 5, 6, 7, 8	Germanium Diode	1N60	
VR1, 2	Potentiometer	581-0141-00	10kΩ
R1, 2	Carbon Film Resistor	RD142HA123J	12kΩ ±5% ½W
C1, 2	Electrolytic Capacitor	CE02W1E3R3	3.3μF 25WV

DISC INPUT ASSEMBLY (716-0009-00)

● PARTS LIST

No.	Description	Part No.	Remarks
	Pin Jack with Ground Terminal	302-0901-00	for DISC 1, 2
S1	Slide Switch	350-0202-00	for IMPEDANCE SELECTOR
R1, 2, 5, 6	Carbon Film Resistor	RD142HA104J	100kΩ ±5% ½W
R3, 4	Carbon Film Resistor	RD142HA433J	43kΩ ±5% ½W
C110, 111	Mylar Film Capacitor	CQ93M1H104M	0.1μF ±20% 50WV
C114	Tantalum Solid Capacitor	CS15E1C100M	10μF ±20% 16WV

TONE AMP. ASSEMBLY

●PRINTED CIRCUIT BOARD

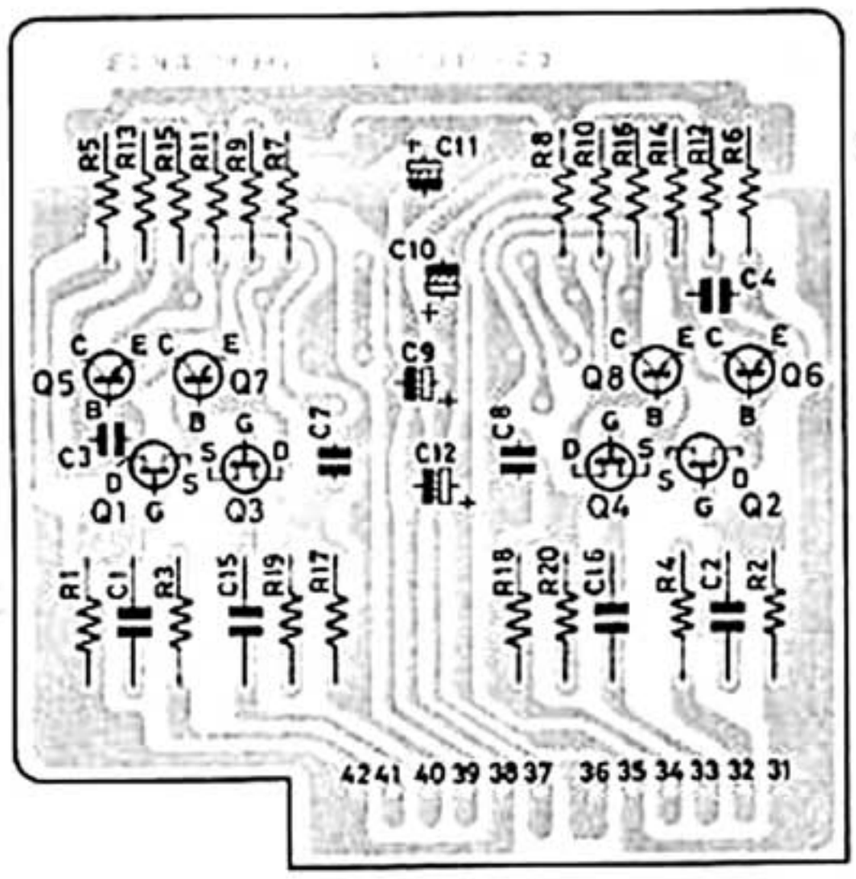

(712-0002-10)

Effective from Serial No.K5U351 (K1U601)

* Printed circuit board as seen from the reverse side.

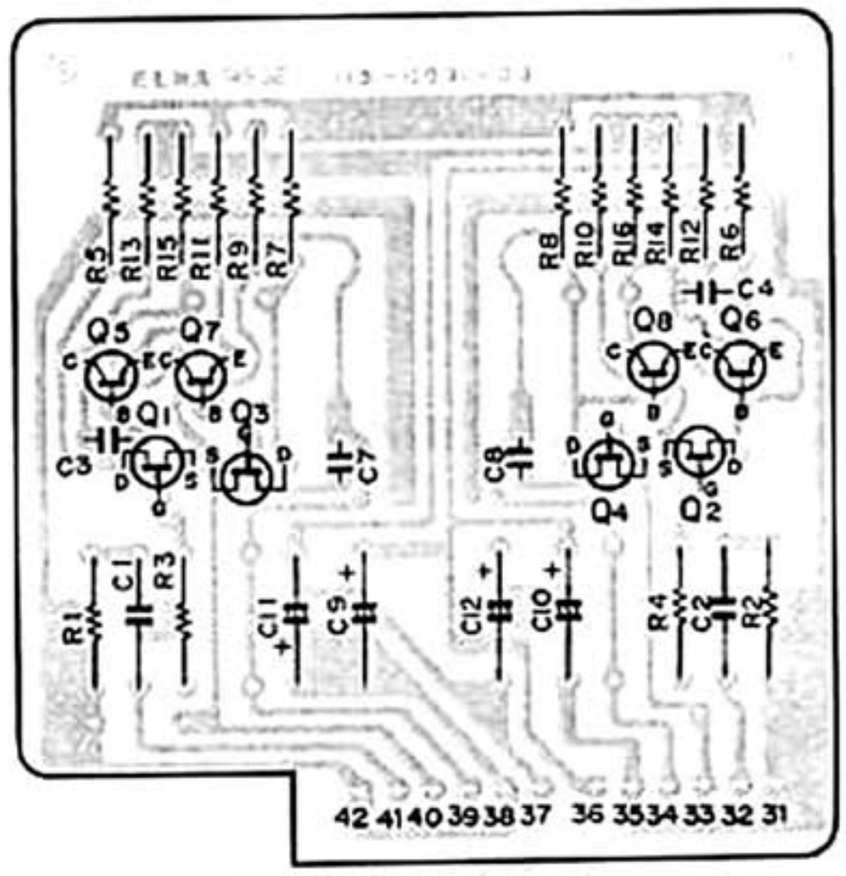

(712-0002-00)

●PARTS LIST

No.	Description	Part No.	Remarks
	Connector Jack	304-5602-00	
Q1-4	FET	2SK23A-4 or 5	
Q5-8	Transistor	2SA620-WLH-4 or 5	
R1, 2	Metal Film Resistor	RN142HA2214F	2.21MΩ ±1% ½W
R3, 4	Carbon Film Resistor	RD142HA221J	220Ω ±5% ½W
R5-8	Carbon Film Resistor	RD142HA682J	6.8kΩ ±5% ½W
R9, 10	Carbon Film Resistor	RD142HA752J	7.5kΩ ±5% ½W
R11, 12	Carbon Film Resistor	RD142HA562J	5.6kΩ ±5% ½W
R13, 14	Carbon Film Resistor	RD142HA203J	20kΩ ±5% ½W

No.	Description	Part No.	Remarks
R15, 16	Carbon Film Resistor	RD142HA560J	56Ω ±5% ½W
R17, 18	Metal Film Resistor	RN142HA475JL	4.7MΩ ±5% ½W
R19, 20	Carbon Film Resistor	RD142HA181J	180Ω ±5% ½W
C1, 2	Metallized Film Capacitor	CQ93M2E224M	0.22μF ±20% 250WV
C3, 4	Mica Capacitor	CM93D2A470J	47pF ±5% 100WV
C7, 8	Mica Capacitor	CM93D2A050D	5pF ±0.5pF 100WV
C9-12	Electrolytic Capacitor	CE04W1H220	22μF 50WV
C15, 16	Metallized Film Capacitor	CQ93M2E104K	0.1μF ±10% 250WV

FILTER AMP. ASSEMBLY (714-0004-00)

PRINTED CIRCUIT BOARD

* Printed circuit board as seen from the reverse side.

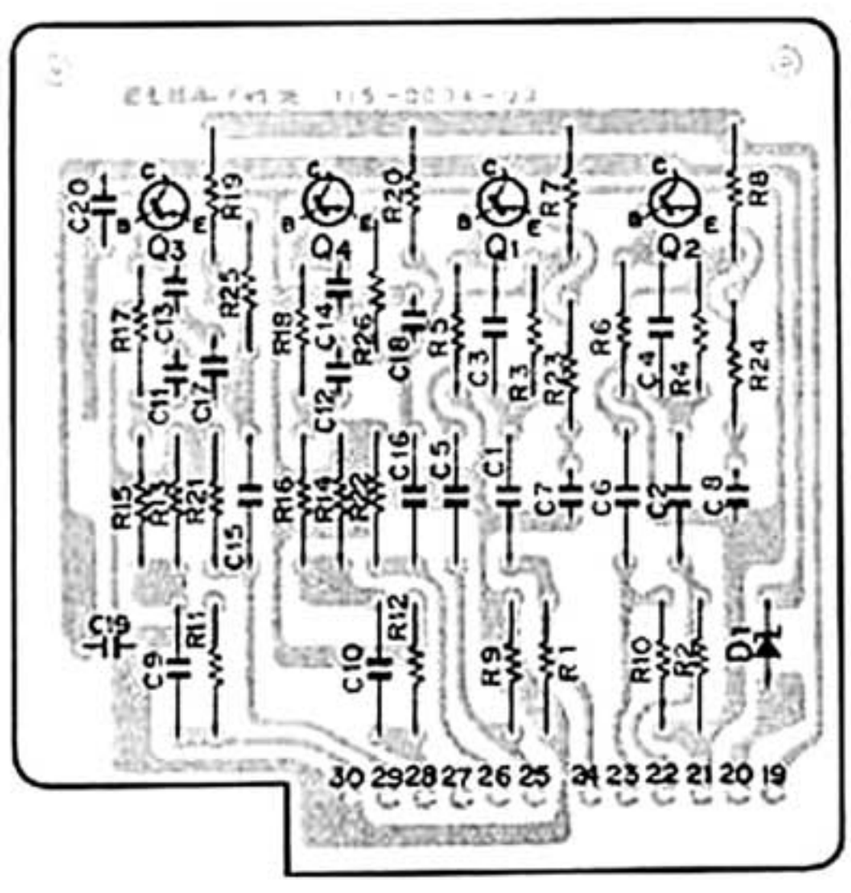

● PARTS LIST

No.	Description	Part No.	Remarks
	Connector Jack	304-5602-00	
Q1, 2, 3, 4	Transistor	2SA620-WL 4 or 5	
R1, 2, 11, 12, 21, 22	Carbon Film Resistor	RD142HA105J	1MΩ ±5% ½W
R3, 4	Carbon Film Resistor	RD142HA133J	13kΩ ±5% ½W
R5, 6	Carbon Film Resistor	RD142HA513J	51kΩ ±5% ½W
R7, 8, 19, 20	Carbon Film Resistor	RD142HA203J	20kΩ ±5% ½W
R9, 10	Carbon Film Resistor	RD142HA473J	47kΩ ±5% ½W
R13, 14	Carbon Film Resistor	RD142HA124J	120kΩ ±5% ½W
R15, 16, 17, 18	Carbon Film Resistor	RD142HA163J	16kΩ ±5% ½W
R23, 24, 25, 26	Carbon Film Resistor	RD142HA221J	220Ω ±5% ½W
C1, 2, 3, 4, 5, 6	Mylar Film Capacitor	CQ93M1H224JZ	0.22μF ±5% 50WV
C7, 8, 17, 18	Ceramic Capacitor	CK45B1B471J	470pF ±5% 50WV
C9, 10, 15, 16	Metallized Film Capacitor	CQ93M2E224M	0.22μF ±20% 250WV
C11, 12	Mylar Film Capacitor	CQ93M1H332JZ	3300pF ±5% 50WV
C13, 14	Mylar Film Capacitor	CQ93M1H122JZ	1200pF ±5% 50WV
C19, 20	Ceramic Capacitor	CK45F1H103Z	0.01μF +80% −20% 50WV

POWER SUPPLY ASSEMBLY (719-0004-00)

● PRINTED CIRCUIT BOARD

*Printed circuit board as seen from the reverse side.

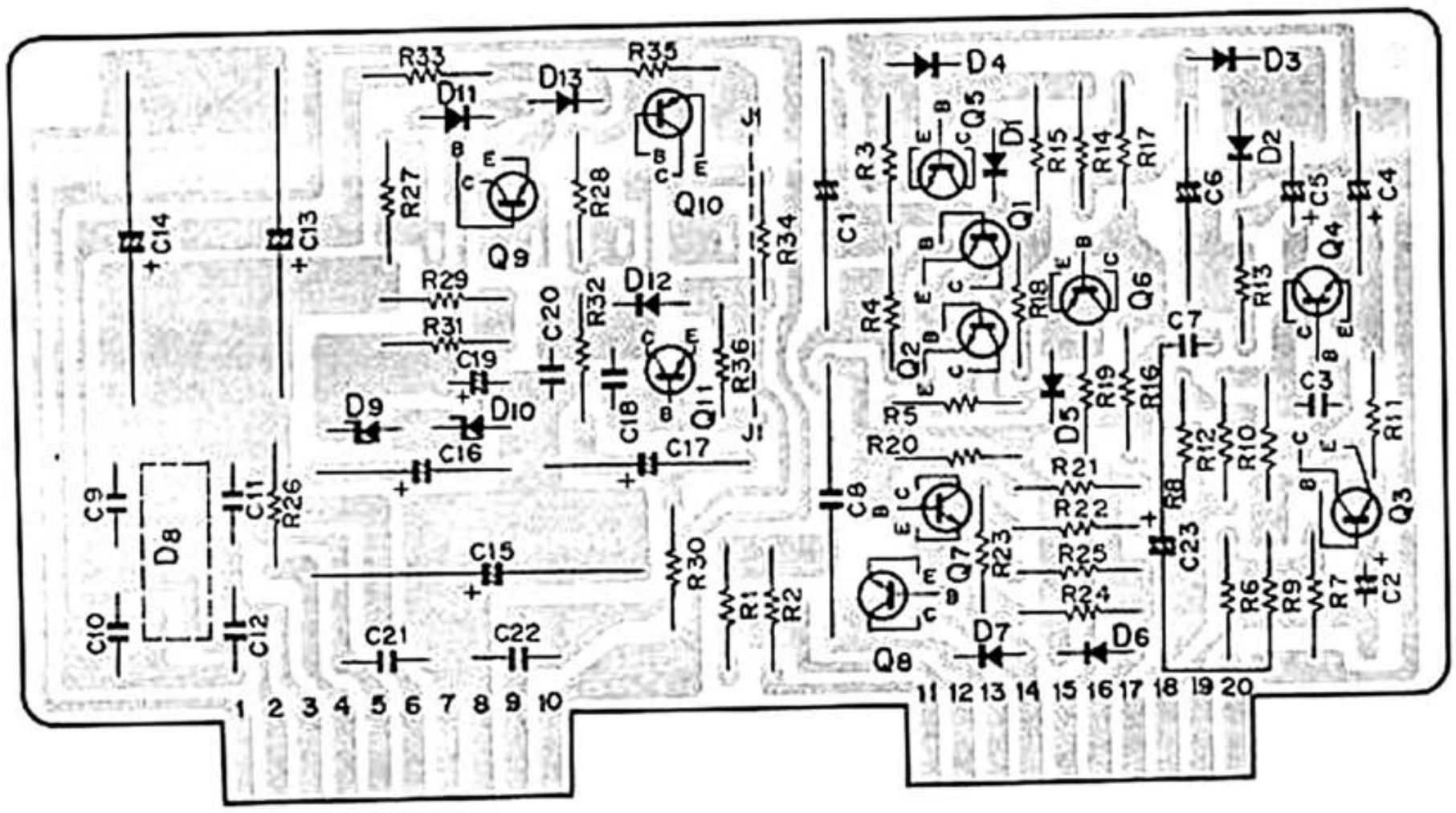

● PARTS LIST

No.	Description	Part No.	Remarks
	Heat Sink	240-1002-04	for Q9, 10
	Transistor Spacer	250-0001-00	for Q6, 8
Q1, 2, 5	Transistor	2SC1451-GorB	
Q3, 4, 7	Transistor	2SC1746-BL	
Q6	Transistor	2SA497-O or Y	
Q8	Transistor	2SC497-R, O or Y	
Q9	Transistor	2SC1382-O or Y	
Q10	Transistor	2SA682-O or Y	
Q11	Transistor	2SA656-GR	
Q1, 2, 3, 4, 5, 13	Silicon Diode	1S1555	
D6	Silicon Diode	1S1553	
D8	Full Wave Bridge	S1RB-40	
D9	Zener Diode	XZ-245	
D10	Zener Diode	XZ-162	
D11, 12	Varistor	SV-02	
	Screw (Pan Head ISO Metallic)	600-0306-01	3×6mm for Q9, Q10
R1, 2, 22, 23, 24	Carbon Film Resistor	RD142HA153J	15kΩ ±5% ½W
R3, 29, 31	Carbon Film Resistor	RD142HA752J	7.5kΩ ±5% ½W
R4, 5, 17	Carbon Film Resistor	RD142HA223J	22kΩ ±5% ½W
R6	Carbon Film Resistor	RD142HA622J	6.2kΩ ±5% ½W
R7	Metal Film Resistor	RN143AA3R9J	3.9Ω ±5% 1W
R8	Carbon Film Resistor	RD142HA433J	43kΩ ±5% ½W
R9	Carbon Film Resistor	RD142HA331J	330Ω ±5% ½W
R10	Carbon Film Resistor	RD142HA274J	270kΩ ±5% ½W
R11	Carbon Film Resistor	RD142HA393J	39kΩ ±5% ½W

No.	Description	Part No.	Remarks
R12	Carbon Film Resistor	RD142HA562J	5.6kΩ ±5% ½W
R13	Carbon Film Resistor	RD142HA181J	180Ω ±5% ½W
R14, 19, 30, 32	Carbon Film Resistor	RD142HA103J	10kΩ ±5% ½W
R15	Carbon Film Resistor	RD142HA823J	82kΩ ±5% ½W
R16	Carbon Film Resistor	RD142HA332J	3.3kΩ ±5% ½W
R18	Carbon Film Resistor	RD142HA101J	100Ω ±5% ½W
R20, 21	Carbon Film Resistor	RD142HA474J	470kΩ ±5% ½W
R25	Carbon Film Resistor	RD142HA560J	56Ω ±5% ½W
R26	Oxide Metal Film Resistor	RS143AA331JG	330Ω ±5% 1W
R27, 28	Oxide Metal Film Resistor	RS143DA681J	680Ω ±5% 2W
R33, 34	Carbon Film Resistor	RD142HA6R8J	6.8Ω ±5% ½W
R35, 36	Carbon Film Resistor	RD142HA333J	33kΩ ±5% ½W
C1	Bipolar Electrolytic Capacitor	CE02D1A101(BP)	100μF 10WV
C2	Electrolytic Capacitor	CE04W1E100	10μF 25WV
C3	Ceramic Capacitor	CC45SL1H101K	100pF ±10% 50WV
C4	Electrolytic Capacitor	CE02W0J101	100μF 63WV
C5	Electrolytic Capacitor	CE04W1H3R3	3.3μF 50WV
C6	Bipolar Electrolytic Capacitor	CE02D1H4R7(BP)	2.2μF 50WV
C7	Mylar Film Capacitor	CQ93M1H102JZ	1000pF ±5% 50WV
C8	Metallized Film Capacitor	CQ91M2E225M	2.2μF ±20% 250WV
C9, 10, 11, 12	Ceramic Capacitor	CK45F2H103P	0.01μF +100% −0% 500WV
C13, 14, 15	Electrolytic Capacitor	CE02W2A101	100μF 100WV
C16, 17	Electrolytic Capacitor	CE02W1K100	10μF 80WV
C18, 20	Ceramic Capacitor	CK45F1H103Z	0.01μF +80% −20% 50WV
C19	Electrolytic Capacitor	CE04W1H4R7	4.7μF 50WV
C21, 22	Ceramic Capacitor	CK45F1H473Z	0.047μF +80% −20% 50WV
C23	Electrolytic Capacitor	CE02W1J101	100μF 63V
C24	Electrolytic Capacitor	CE02W1H010	1μF 50WV
C25	Bipolar Electrolytic Capacitor	CE04D1E 4R7(BP)	4.7μF 25WV

PUSH-BUTTON SWITCH ASSEMBLY

●PRINTED CIRCUIT BOARD

*Printed circuit board as seen from the reverse side.

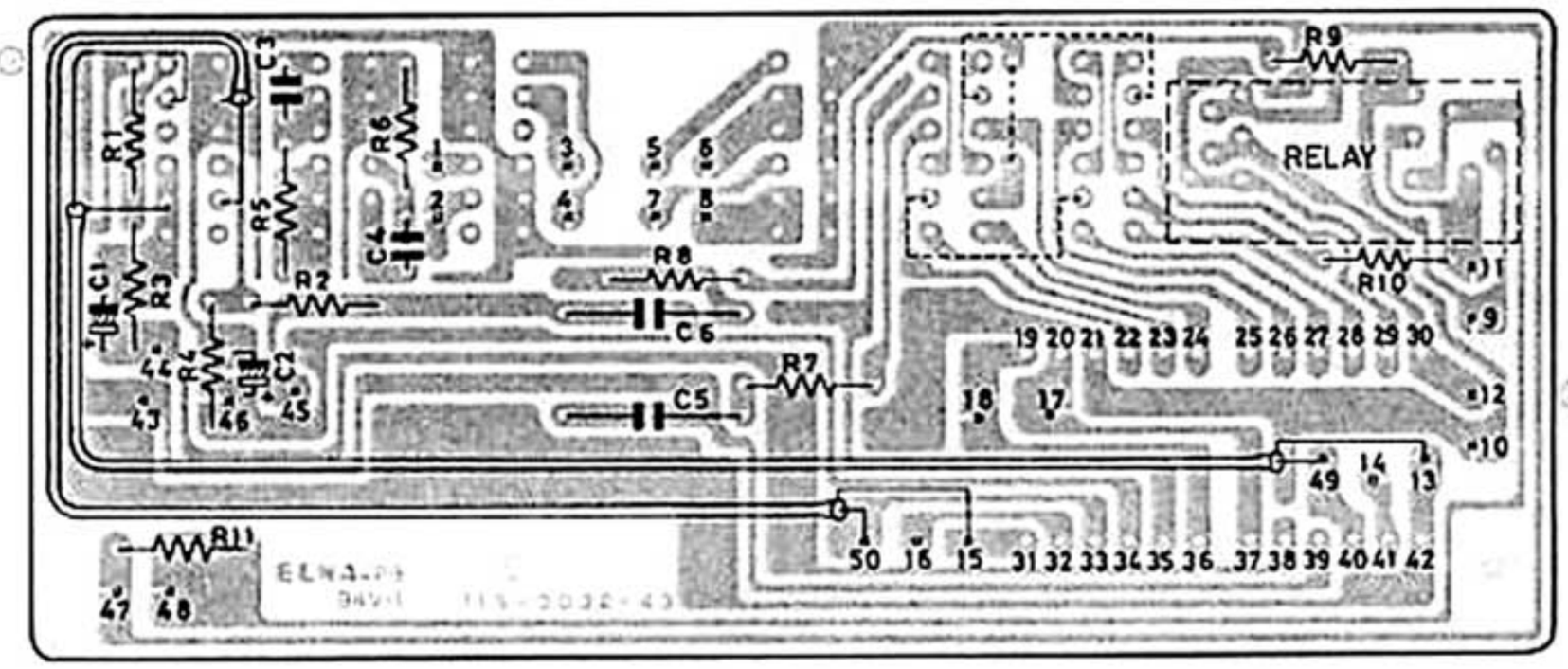

(716-0007-10)

The ON/OFF Switch for the Pre-out is housed in the P.C.B.

Effective from Serial No. K5U351(K1U601)

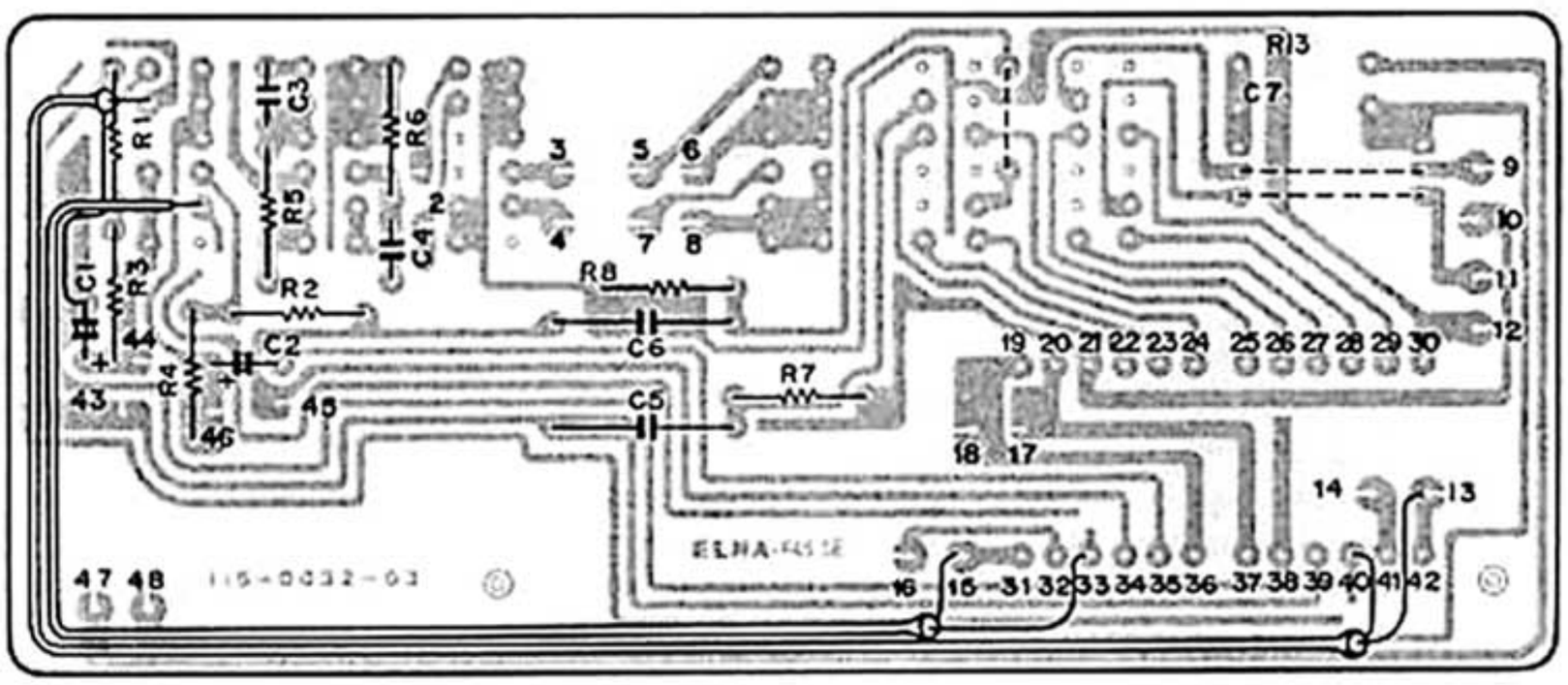

(716-0007-00)

●PARTS LIST

No.	Description	Part No.	Remarks
	Connector Plug	304-0603-00	
	Push-button Switch	354-6402-10	
	Reed Relay	363-1202-00	for PREOUT ON/OFF
R1, 2	Carbon Film Resistor	RD142HA5492G	54.9kΩ ±2% ½W
R3, 4	Carbon Film Resistor	RD142HA9311G	9.31kΩ ±2% ½W
R5, 6	Carbon Film Resistor	RD142HA163J	16kΩ ±5% ½W

No.	Description	Part No.	Remarks
R7, 8	Carbon Film Resistor	RD142HA221J	220Ω ±5% ½W
R9, 10	Carbon Film Resistor	RD142HA391J	390Ω ±5% ½W
R11	Carbon Film Resistor	RD142HA681J	680Ω ±5% ½W
C1, 2	Tantalum Solid Capacitor	CS15E1C220M	22μF ±20% 16WV
C3, 4	Mylar Film Capacitor	CQ93M1H393J	0.039μF ±5% 50WV
C5, 6	Metallized Film Capacitor	CQ93M2E105M	1μF ±20% 250WV
R12, 13	Solid Resistor	RC921JA107P	100MΩ 0.063W

TRANSISTOR LEADS

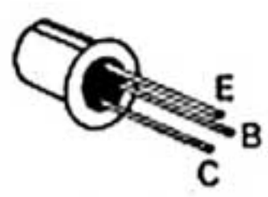

2SA856
2SA856A
2SC1746
2SC1746A

2SA809
2SA810
2SC1451
2SC1452

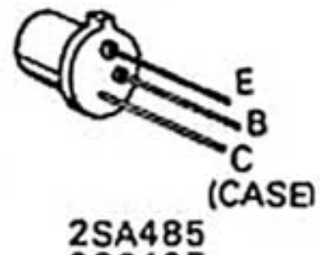

2SA485
2SC497

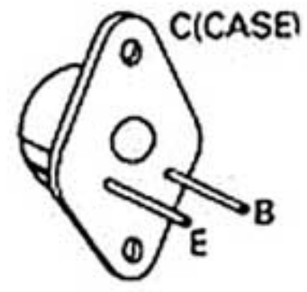

2SA679
2SC1079
2SC1431
2SA762

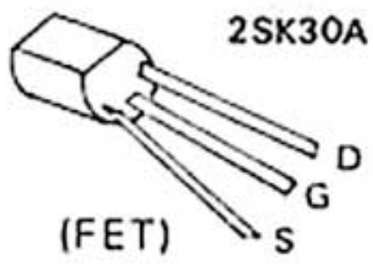

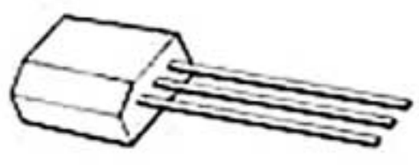

(FET)2SK23A

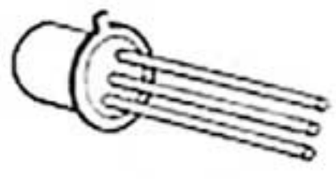

2SA620

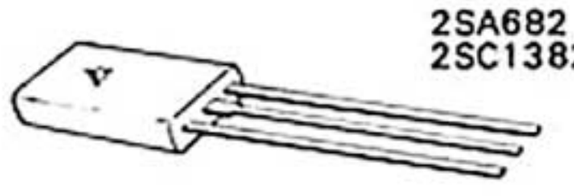

2SA682
2SC1382

CIRCUIT DESCRIPTION

The bias current of a Main Drive amplifier must be stable under all operating conditions.
This is particularly so in the case of Main Drive amplifiers whose every stage is direct-coupled since instability in any one stage will adversely affect current flow in the final output stage. Good stability is ensured in this Integrated Amplifier with the following methods. (Refer to the Main Drive Amplifier Assembly No.710-0002-00 in the schematic diagram)

1. A fixed voltage is applied with a constant voltage power supply, which employs a silicon diode (D1) to the emitters of Q1, Q2 that make up the first stage differential amplifier circuit. In addition silicon diodes D1, D2, D3 and D4 are inserted in the collector circuit to stabilize the current of the following stage for Q13 to Q15 and Q14 to Q16 where Darlington amplification is employed.
2. Heat compensation is provided to assure constant current drive to the final stage with a silicon varistor (D3:STV-4H which is mounted beneath the power transistor heat sink), a thermistor (TH1: TP-31L connected to Q7 2SC1431), and potentiometer VR1 that are all employed to the collectors of Q4. The bias current for the final stage is the sum total requirement of the power transistors (L channel: Q1, Q3, Q5 and Q7 or R channel: Q2, Q4, Q6 and Q8) and is set at 60 – 100mA. Power consumption during no signal condition is limited to this small current drain and so creates hardly any heat. If the amplifier is operated continuously at an average power output of 20 watts, both sides of the upper top plate should heat up to about 35 degrees centigrade (about 95 degrees fahr.). If the amplifier is operated continuously at full power to deliver a single frequency signal, it may heat up as high as 70 degrees centigrade (160 degrees fahr.). If only one side of this amplifier heats up, bias current adjustment should be made, as explained on the following page, after the heat compensating elements have first been checked and found in order. Bias current adjustment is also necessary when the Main Drive Assembly printed-circuit board or the power transistors are replaced.

A. BIAS CURRENT ADJUSTMENT

This amplifier is equipped with testing points TP1 and TP2 as shown in Fig. for bias current adjustment. This current is calculated from the voltage that is measured across these test points, as follows:

1. After the amplifier has been serviced and restored to normal, connect speakers or dummy loads to it. If there is an input signal, then cut the signal off.
2. Connect a volt-ohm-multitester or voltmeter with an interior impedance of more than 100KΩ/V and full scale range of 0.3V across TP1 (+) and TP2 (–).
3. Adjust Main Drive Assembly VR1 (see Fig.) so that the meter indicates 0.05V which represents a current flow of 50mA. (Turning VR1 in clockwise direction increases the current flow.)
4. Adjust VR1 for the opposite channel in the same manner, and then adjust the center voltage following the procedure as explained paragraph B.
5. Reset the Speaker Switch to the position where a load is connected feed a signal into the amplifier confirm if it is operating normally
6. Let amplifier warm up thoroughly with an output of one watt for approximately 15 minutes.
7. Now cut the input signal off, connect the voltmeter again to the testing points and adjust VR1 so that the meter indicates 0.08V which represents about 80mA.

Note 1: The Power Level Meter will deflect even under no signal conditions if the center voltage is not correctly at "0" potential. In such a case, switch off the load (set SPEAKERS switch to OFF position) and adjust the center voltage first, as explained in the following paragraph, before attempting to make this bias adjustment.

2: Bias current above is calculated as follows:
1 = V/R
where V is the voltmeter reading,
and R is 0.67 ohms (the resistance of the power transistor emitter resistor).

B. CENTER VOLTAGE ADJUSTMENT

The output terminals of a direct coupled, positive-negative dual power supply type amplifier should be at "0" electric potential in terms of DC. This voltage can be kept to within ±200mV with an ordinary circuit design, which does not employ the aid of a voltage adjustment circuit However, this power amplifier is equipped with such an adjustment circuit to ensure further stability.
Its adjustment is made as follows

1. Connect the same type of voltmeter that was used for bias adjustment across unloaded speaker terminal and set the SPEAKERS switch to the corresponding position.
2. Switch power ON and, under no signal conditions adjust VR2 of the Main Drive Assembly (see Fig.) so that the meter indicates 0 volts.

C. POWER LEVEL METER ADJUSTMENT

The power level meter on this amplifier is adjusted to indicate 0dB when the amplifier produces an output of 100W at 8 ohm load. It can be readjusted as follows if it is suspected that meter indications may be abnormal.

1. Connect an 8 ohm 100 watts dummy load and VTVM to an open speaker terminal.
2. Feed a 1 kHz signal, and set volume control to maximum position to get an output of 100 watts (28.28V).
3. With METER RANGE switch set at "0dB" position, adjust VR1 (right channel) and VR2 (left channel) (see Fig.) so that the Power Level meter indicates 0dB.

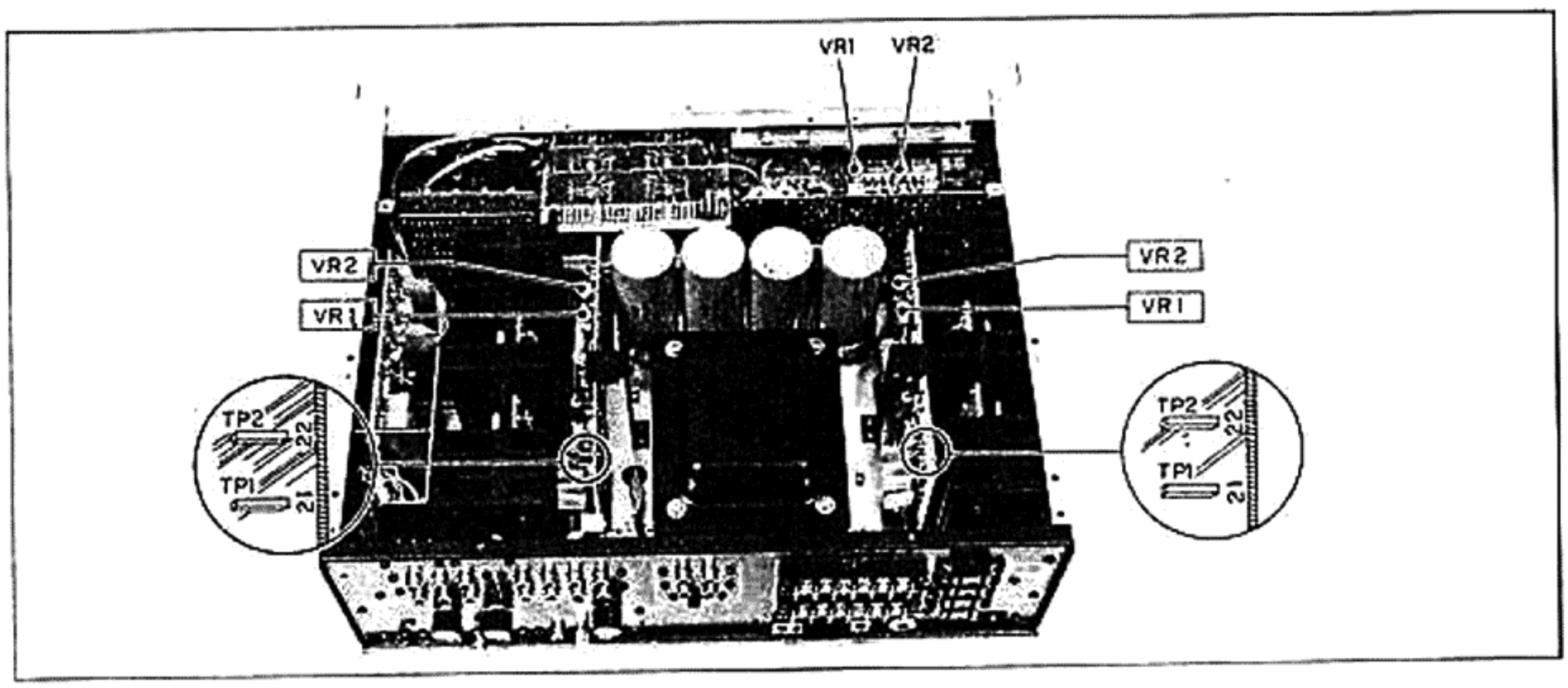

Figure TEST POINT AND ADJUSTMENT POTENTIOMETERS

PROTECTION CIRCUIT DESCRIPTION

This unit has, inaddition, four other protection circuit, namely: an ASO (Area of Safety Operation) limiter circuit, an abnormal load impedance detector circuit, an abnormal DC output voltage detector circuit and a relay control circuit which triggers a relay in the output load circuit. These various protection circuit are described below.

1. ASO LIMITER CIRCUIT

This circuit employs Q5, Q6, D2, D3, D4 and D5 which are located in the Main Drive Assembly (710-0002-00). In Case of a short circuit in the speaker connecting network, or when the load impedance drops to an abnormally low value, this circuit limits the input signal level to the B-class driver transistors Q7 and Q8. This serves to clip their output and protect the power transistors by keeping them working within the area of safe operation (ASO).
A special feature of this circuit is that it protects the power transistors against exceptionally strong pulse surges of short duration without having to activate the circuit breaking protection relay.

—Checking the circuit
Obtain a 20V output when delivered into a 4 ohm load. Then change the load value to 2 ohm. Cliping should then occur identically on both the positive and negative cycles of an output signal waveform.

2. ABNORMAL LOAD IMPEDANCE PROTECTION CIRCUIT

If AC power is turned ON when the output impedance happens to be extremely low or non-existent as in the case of a shorted or near-shorted speaker circuit, this situation is quickly detected by this circuit which then prevents the load circuit relay from closing. This protection circuit employs Q3, Q4, Q5, D3 and D4 which are located within the Power Supply Assembly (719-0004-00).
When power is turned on under normal conditions, an AC line frequency signal is applied to Q3 via terminal 19 of the Power Supply Assembly. This is amplified by Q3 and Q4, and is supplied as a minus voltage to the base of Q5 after being rectified by the voltage doubler rectifier D2 and D3. This causes Q5 to turn OFF and permits normal operation of the Relay Control Circuit to close the relay shortly after power is turned on. In case of an abnormally low load impedance, or a short circuited output, however, the AC line frequency signal is not applied to Q3. Q5 is then biased by R15 (82 Kohms) which turns it ON. This causes the relay control circuit to keep the relay open and prevent connection to the output load.

—Checking this circuit
If the relay does not close after AC power is turned on, check the following. Voltage across R14 of D3 should be more than −3V.

3. DC OUTPUT VOLTAGE DETECTER CIRCUIT

When a large, very low frequency voltage is applied to the speakers, or when a high DC voltage is created in the output circuit due to a fault in the power transistor circuit, damage may be caused to the speakers. This protection circuit prevents this possibility by causing the relay to open the speaker circuit and consists of Q1, Q2 and D1 in the Power Supply Assembly (719-0004-00). When the output voltage potential is "+", Q1 is turned ON. When it is "−", Q2 is turned ON. This reduces the collector voltage and triggers the relay to break the speaker circuit. For signal frequencies above 7Hz, however, the relay will remain closed up to the full rated power output due to the time constant of C1. For signal frequencies below 7Hz, the relay will break the speaker circuit before full power is reached.

—Checking the circuit action
Set the Speaker Selector Switch to the position where no load is connected and apply a 5Hz signal. With meter sensitivity set at 0dB, the relay should break the speaker circuit before a 0dB output is reached.

4. LOAD CONNECTING RELAY CONTROL CIRCUIT

This circuit consists of Q6, Q7, Q8, D5 and D6 located in the Power Supply Assembly (719-0004-00). It controls relay action in accordance with signals from the protection circuits explained in "2" and "3" above. In addition, it has two other functions, namely to prevent the relay from closing for an interval of about 4 seconds after power is turned ON and enable circuits to stabilize. It also breaks the speaker circuit when power is turned OFF and prevents reproduction of residual output energy.

—Checking circuit action

a. When power turned ON
Stages preceding Q6 have no relation to this circuit action. For a 4 second interval immediately after power is turned on capacitor C8 is charging. This causes Q7 to remain at ON and Q8 at OFF, and the relay remains open. After about 4 seconds creates a "0" base bias which causes Q7 to turn OFF and Q8 to turn ON to close the relay.

b. Circuit action in case of trouble
When an abnormal situation occurs, as explained under "2" and "3" above, action of these respective circuits causes Q6 to turn ON. This further causes Q7 to turn ON, and Q8 to turn OFF. The relay which was open in the case of "2" remains open. The relay which was closed in the case of "3" then opens. Power transistors and speakers are thus protected in this manner.

c. When power is OFF.
As explained in "2" above, the relay opens when power is turned OFF and cuts off the speakers simultaneously to prevent reproduction of residual output energy.

CHECKING THE POWER SUPPLY

A circuit breaker is provided in the power supply on the primary side of the power transformer. It functions if a fault should occur in the supply circuit to the power transistors or in the power transformer.
Moreover, a fuse protects the power transformer from overheating in case of a short circuit in the secondary circuit that may not trigger the primary side circuit breaker.
It is located on the printed circuit board that is mounted behind the Power Meter. It should be checked in the following cases.

- When the Power Meter Lamp does not light → F3 (1A)
- When the Load Circuit Breaker Relay does not work after AC power is switched ON. → F1, F2 (1A)

Note: To replace this fuse, remove the two screws which hold down the circuit board. Then pull the board straight out to the rear, and the fuse will become accessible.

THE MARK OF CAPACITOR AND RESISTORS ON THE SCHEMATIC DIAGRAM

□: METAL FILM RESISTORS
■: OXIED METAL FILM RESISTORS
▨: CEMENT COATED WIRE WOUND RESISTORS
◪: CEMENT COATED METAL PLATE RESISTORS
○: CERAMIC CAPACITORS
⊖: MICA CAPACITORS
⊘: TANTALUME SOLID CAPACITORS
●: METALLIZED FILM CAPACITOR
⊕: POLYSTYRENE FILM CAPACITORS
⊙: MYLAR FILM CAPACITORS

Unless other wise specified: Capacitors are ELECTROLYTIC Types: Resistors are CARBON FILM Types. 1/2 watt. and ±5% tolerance:

Indicated values of parts the schematic diagram may be changed in case of performance improvement.

E-202 REVISED SCHEMATIC DIAGRAM

This is the New Schematic Diagram as of JAN, 1977.

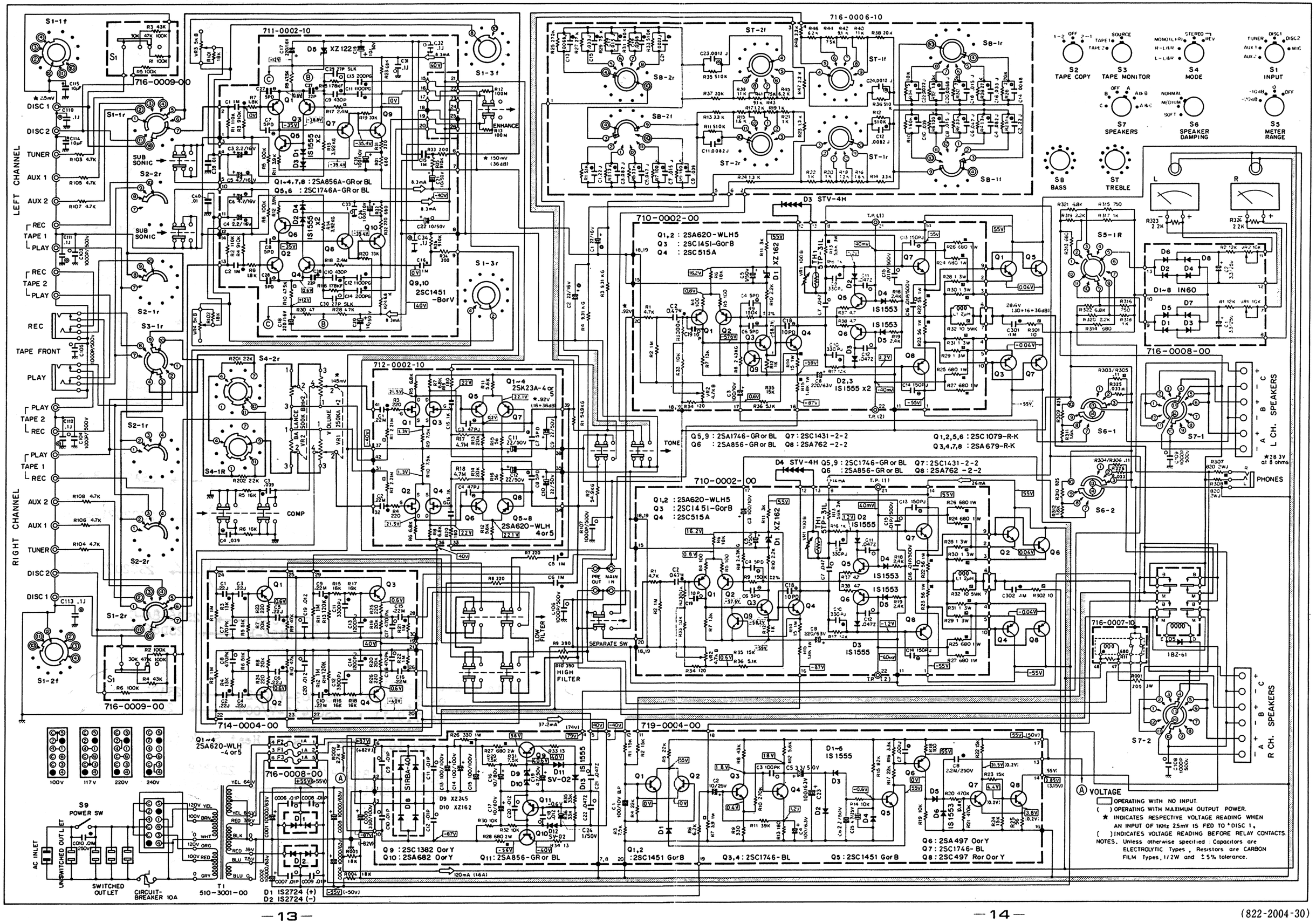

SPECIFICATIONS

POWER OUTPUT: (both channels driven from 20Hz to 20,000Hz with no more than 0.1% total harmonci distortion):
140 watts per channel, min. RMS, at 4 ohms
100 watts per channel, min. RMS, at 8 ohms
50 watts per channel, min. RMS, at 16 ohms

TOTAL HARMONIC DISTORTION: (from 20Hz to 20,000Hz at any power output from 1/4 watt to rated power)
4 ohms; 0.15% max.
8 ohms; 0.15% max.
16 ohms; 0.15% max.

INTERMODULATION DISTORTION: (High Level Input to Main Output)
will not exceed 0.1% at rated power output for any combination of frequencies between 20Hz and 20,000Hz

FREQUENCY RESPONSE:
Main Amp. Input: +0, −0.2dB
High Level Input: +0, −0.5dB
Low Level Input: +0, −1.0dB
(at rated power output from 20Hz to 20,000Hz)

DAMPING FACTOR: (8 ohms load at 40Hz)
with "SPEAKER DAMPING" switch set to:

"NORMAL"	"MEDIUM"	"SOFT"
50	5	1

INPUT SENSITIVITY AND IMPEDANCE:
Disc 1; 2.5-5mV*; 30K ohms, 47K ohms, 100K ohms
Disc 2; 2.5mV; 47 kohms
High Level Input: 160mV; 100K ohms
Main Amp. Input: 1.0V; 100K ohms
(*2.5-5mV variable)

MAXIMUM INPUT FOR LOW LEVEL INPUT:
Disc 1; 300mV RMS at disc level control maximum for 1kHz
Disc 1; 600mV RMS at disc level control minimum for 1kHz
Disc 2; 300mV RMS
(distortion 0.05% at 1 kHz)

OUTPUT LEVEL AND IMPEDANCE:
Preamp. Output; 1.0V, 600 ohms (at rated input level)
Tape Rec. 1, 2; 160mV, 200 ohms (at rated input level)

HEADPHONE JACK:
For listening with low impedance (4-32 ohms) dynamic stereo headphones

VOLTAGE AMPLIFICATION IN DECIBELS:
Main Amp. Input to Output: 29 dB
High Level Input to Preamp. Output; 16dB (at VOLUME control maximum)
Low Level Input to Tape Rec.; 36dB (Disc 1 level control provides 6dB variation)

HUM AND NOISE:
Main Amp. Input; 94dB below rated output
High Level Input; 80dB below rated output
Low Level Input; 74dB below rated output
when adjusted for 10mV input at 1kHz

BASS/TREBLE controls: 10-step Rotary Switch for both channels with ON-OFF switch. Tone is varied in 2 dB steps.
BASS turnover frequency; 400Hz, ±10dB at 100Hz
TREBLE turnover frequency; 2.5kHz, ±10dB at 10,000Hz

VOLUME control: Less than 1dB tracking error.

COMPENSATOR: ON position boosts low frequencies for low level listening.
+9dB boost at 50Hz when the volume knob is adjusted to −30dB position.

DISC LOW ENHANCEMENT (for Disc Input):
+1dB at 100Hz to RIAA standard characteristics with "LOW ENHANCE" switch set to ON position.

FILTERS:
Disc Subsonic Filter; 25Hz cutoff 6dB/oct
Low Filter; 30Hz cutoff 18dB/oct
High Filter; 5kHz cutoff 12dB/oct

POWER LEVEL METER:
Meter is calibrated to read 0dB when amplifier produces 100 watts into 8 ohms load.
METER RANGE switch is provided to increase meter sensitivity by 10dB or 20dB.

OUTPUT LOAD IMPEDANCE: 4, 8 and 16 ohms

POWER REQUIREMENT:
Voltage selector for 100V, 117V, 220V, 240V 50/60Hz operation
Consumption: 70 watts at zero singal output
375 watts at rated power output into 8 ohms load

SEMICONDUCTOR COMPLEMENT:
53 Transistors, 4 FET's, 44 diodes, 2 Thermistors

DIMENSIONS: 455mm (18 inches) wide, 152mm (6 inches) high, 355mm (14 inches) deep

WEIGHT: 19.5 kgr. (42.9 lbs.) net, 23.8 kgr. (52.3 lbs) in shipping carton.

Service Information No. COM-009

MODEL

SUBJECT : Re Substitution of Transistors

Issued Aug. 1982

Effective Serial No.

Details; **Substitutions**

C-220 Power Supply Circuit
Q1,2,16,17,28,29 : 2SK30A-O ⟶ 2SK117-O
Q13 : 2SK30A-GR ⟶ 2SK30A-Y
Q18 : 2SB435-O or Y ⟶ 2SB834-O
Q19 : 2SD235-O or Y ⟶ 2SD880-O
R11 : 470 ohms ⟶ Jumper Wire (to be changed)

E-202/P-250
Power Supply Circuit — 2SC1451-G or B ⟶ 2SC2229-O or Y

P-20 Protection Circuit — 2SC1596-V/003 ⟶ 2SC2229-O or Y

P-300S/ P-300/ E-202
Final Stage — 2SA679-R ⟶ 2SB555-R; 2SC1079-R ⟶ 2SD425-R

P-300/ E-202
Main Drive Circuit — 2SA809-V/002, 2SA931-V/002 ⟶ 2SA939-B or V; 2SC1451-V/004, 2SC1596-V/003 ⟶ 2SC2071-B or V

E-202 Equalizer Circuit — 2SC1451-V/004, 2SC2229 ⟶ 2SC2071-B or V

P-300S Main Drive Circuit — 2SA810-B ⟶ 2SB648A-C; 2SC1452-B ⟶ 2SD668A-C

M-60 Main Drive Circuit
Q5,8,10,12 : 2SA809-V/002 ⟶ 2SA970-BL
Q6,7,9,11 : 2SC1451-V/004 ⟶ 2SC2240-BL

**Q9,10,11,12 — with Heat Sink (240-2006-00)

Q13 : 2SA810-B/101 ⟶ 2SA818-O or Y
Q14 : 2SC1452-B/101 ⟶ 2SC1628-O or Y

D15,16 : CZ-060 ⟶ RD6.2F-B

For All Models — 2SA856A-GR or BL ⟶ 2SA970-BL; 2SC1746-GR or BL ⟶ 2SC2240-BL

Service Information No. COM-010

MODEL

Issued AUG. 1982

SUBJECT : RE Substitution of Transistors

Effective Serial No.

Details; **SUBSTITUTION**

2SA489 → 2SB596
2SA579 → 2SB555

2SC789 → 2SD526
2SC1079 → 2SD425

2SB435 → 2SB834
2SD235 → 2SD880

2SK30A → 2SK117

2SA809, 2SA931 } → 2SA939-B,V or 2SA949-Y
2SC1451, 2SC1596 } → 2SC2071-B,V or 2SC2229-Y
(for signal path use exclusively 2SA939 and 2SC2071.)

Pioneer Service Information No. COM-011

MODEL

SUBJECT : Improvement of Relays at low level signal stage.

Issued AUG. 1982.

Effective Serial No.

Details;

Following new, high-reliable, closed type relays are currently employed for use of low-level signal path.

- For parts order, please refer to new numbers.

RECEIVED NOV 2

		Part No.	
362-2403-00	⟶	362-2404-00	or 362-2404-10
362-2205-00	⟶	362-2212-00	or 362-2212-10
362-2208-00	⟶	362-2208-10	

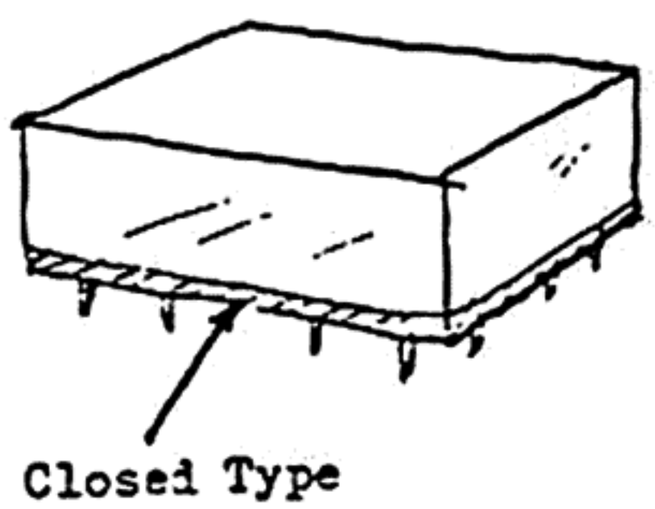

Accuphase

KENSONIC LABORATORY INC.
2124-6 MOTOISHIKAWA-CHO,
MIDORIKU, YOKOHAMA, JAPAN