KENWOOD

HI/FI STEREO COMPONENTS

# SERVICE MANUAL

# KA-2000

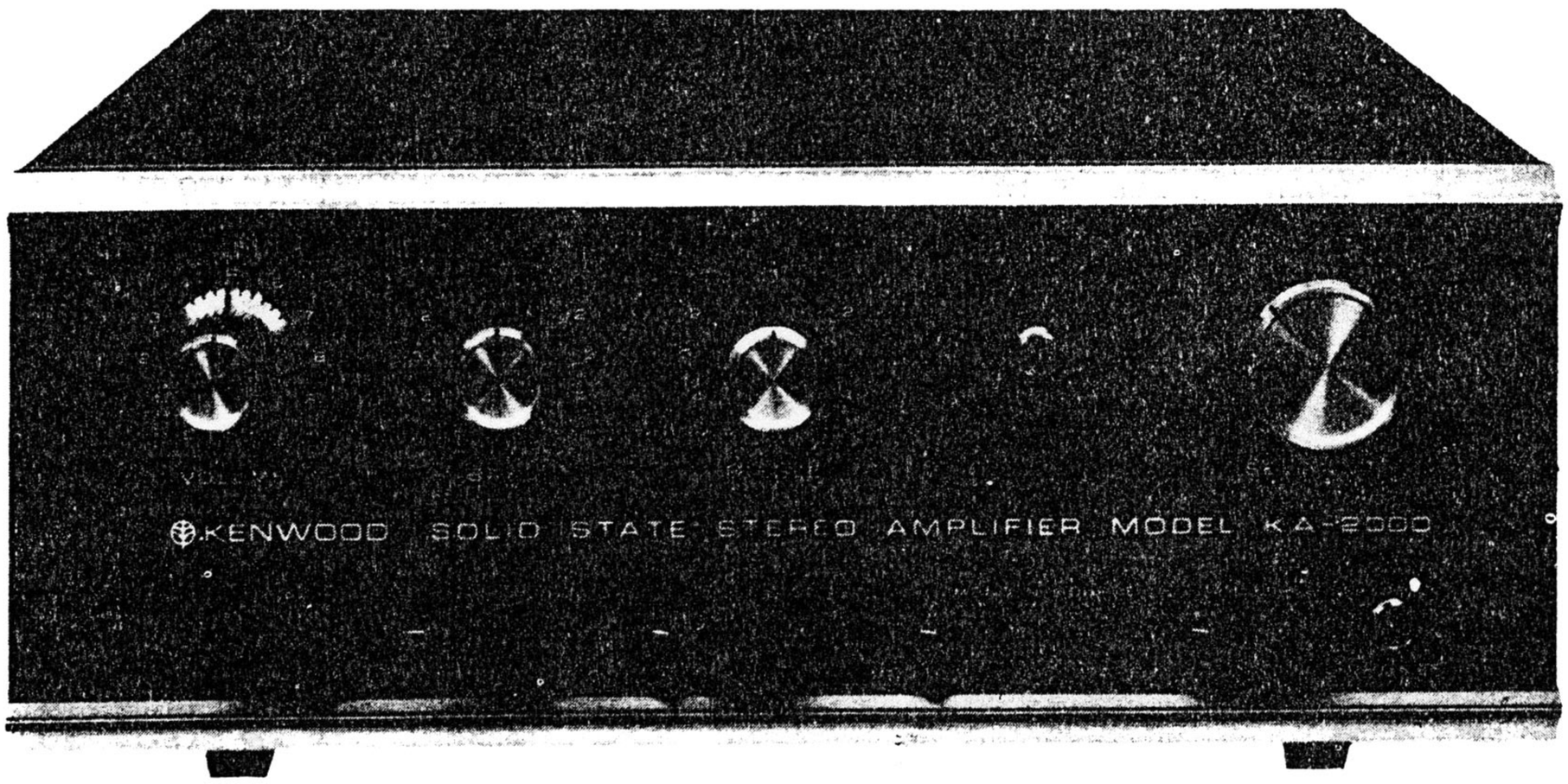


SOLID STATE STEREO AMPLIFIER

www.hifiengine.com

# PARTS DESCRIPTION LIST

## MAIN CHASSIS SECTION

### PRINTED CIRCUIT

| | |
|---|---|
| – | PRE AMP BLOCK (UA13064) |
| – | TONE AMP BLOCK (UA13091A) |
| – | MAIN AMP BLOCK (8215) |

| Symbol No. | Description | | | Part No. | Remarks |
|---|---|---|---|---|---|
| | **RESISTORS** | | | | |
| R1, 2 | Fixed Carbon Composition | 2.2KΩ | ±10% ½W | | |
| R3, 4 | Fixed Carbon Composition | 10KΩ | ±10% ½W | | |
| R5, 6 | Fixed Carbon Composition | 15KΩ | ±10% ½W | | |
| R7, 8 | Fixed Carbon Composition | 4.7KΩ | ±10% ½W | | |
| R9 ~ 12 | Wire Wound | 0.47Ω | ±10% 1W | | |
| R13, 14 | Fixed Carbon Composition | 4.7Ω | ±10% ½W | | |
| R15, 16 | Fixed Carbon Composition | 330Ω | ±10% ½W | | |
| R17 | Fixed Carbon Composition | 220Ω | ±10% ½W | | |
| R18 | Fixed Carbon Composition | 4.7KΩ | ±10% ½W | | |
| R19 | Metal Film | 1KΩ | ±5% 2W | | |
| R20 | Fixed Carbon Composition | 47Ω | ±10% ½W | | |
| | **CAPACITORS** | | | | |
| C1, 2 | Ceramic | 0.001μF | ±20% | | |
| C3, 4 | Mylar | 0.1μF | ±20% | | |
| C5, 6 | Electrolytic Tubular | 1000μF | 25WV | | |
| C7, 8 | Mylar | 0.22μF | ±20% | | |
| C9 | Electrolytic Tubular | 220μF | 25WV | | |
| C10 | Electrolytic Block | 1000μF | 30WV | | |
| C11 | Electrolytic Block | 2200μF | 50WV | | |
| C14 | Oil Impregnated paper | 0.01μF | ±20% | | |
| | **POTENTIOMETERS** | | | | |
| VR1 | 50KΩ ($T_2$–26) x 2 | VOLUME | | R04-2208 | |
| | **SWITCHES** | | | | |
| S1 | SELECTOR Rotary Y–2·6·4 | | | S03-682 | |
| S2 | POWER See Saw (M, S) | | | S10-310 | |
| | POWER See Saw (E, W) | | | S10-22Q | |
| S3 | LOUDNESS See Saw | | | S10-22J | |
| S4 | MODE See Saw | | | S10-22J | |
| S5 | TAPE MONITOR See Saw | | | S10-22J | |
| S6 | AC VOLT SELECT Slide (M, S, W) | | | S10-22R | |
| | **TRANSISTORS/DIODES** | | | | |
| Q1 ~ 4 | 2SD91 POWER Amp, | | | | |
| D1, 2 | DS1N Rectifier | | | | |
| | **MISCELLANEOUS** | | | | |
| – | Chassis | | | A03-CA61 | |
| – | Panel | | | A05-CA613(A) | |
| – | Sole Plate | | | A08-CA61 | |
| – | Radiator | | | A26-21 | |
| – | L Shape Metal Fittings x2 | | | A35-07 | |



www.hifiengine.com

# PARTS DESCRIPTION LIST

| Symbol No. | Description | Part No. | Remarks |
|---|---|---|---|
| – | Jewel (Red) | A53-201 | |
| – | Lamp Cover | A3794 | |
| – | Lead Holder x 2 | A4880 | |
| – | Metal Fittings (for jewel) | A4924 | |
| – | Name plate (LA Standard) | B09-192 | |
| – | AC Socket (Black) | E02-06 | |
| – | PL Socket | E03-02F | |
| – | Lug x2 | E04-101B | |
| – | Lug x 4 | E04-202 | |
| – | Terminal 4P | E06-24G | |
| J | Pin jack 2P x 2 | E08-12H | |
| J | Pin jack 8P | E08-18E | |
| – | Pin plug x 4 | E09-410 | |
| J | Phone jack | E16-15 | |
| – | Transistor Socket x 4 | E4078 | |
| – | Legs x 4 | G10-06 | |
| – | Polyethylene Cover (270 x 120 x 250) | H02-120 | |
| – | Corrugated Cardboard Case | H04-CA613A | |
| – | Instruction Manual | H05-CA612A | |
| – | Corner padding (for Corrugated Cardboard Case) | H09-BB2KA | |
| – | Corner padding (for Corrugated Cardboard Case) x 2 | H09-BB2KB | |
| – | Polyethylene Bag | H13-02 | |
| – | Schematic Diagram | H15-CA613 | |
| – | Soft Tape (8 x 30 x 10 t) | K11-105 | |
| – | Decorative Screw x 4 | N11-68 | |
| – | Speed Nut (out side Diameter 8 x 14) | N4001 | |
| – | Knob (VOLUME) Dual Back | S14-259 | |
| – | Knob (SELECTOR) | S14-331 | |
| – | Knob (VOLUME) Dual Front | S14-807 | |
| – | Knob (BASS, TREBLE) | S14-808 | |
| – | Fuse Holder | S15-03B | |
| P.L | Pilot Lamp | S16-22 | |
| F | Fuse (Tube 1A) | S17-01 | |
| – | P.V.C Insulated Wire (Black) 0.5φ (0.2m) | W02-50 | |
| – | P.V.C Insulated Wire (Red) 0.5φ (1.5m) | W02-52 | |
| – | P.V.C Insulated Wire (Yellow) 0.5φ (2.1m) | W02-54 | |
| – | P.V.C Insulated Wire (Blue) 0.5φ (2.3m) | W02-56 | |
| – | P.V.C Insulated Wire (White) 0.5φ (0.6m) | W02-59 | |
| – | P.V.C Insulated Wire (Black) 0.8φ (1.4m) | W02-80 | |
| – | P.V.C Insulated Wire (White) 0.8φ (0.7m) | W02-89 | |
| – | Tinned Wire 0.8φ (0.2m) | W03-08 | |
| – | Insulating Sleeve (0.5m) | W06-154 | |
| – | Vinyl Tube (Transparency) 10φ (0.06m) | W07-10Z | |
| – | Single-Core Shielded Wire (Black) (0.3m) | W11-010G | |
| – | Single-Core Shielded Wire (Yellow) (1.24m) | W11-014G | |
| – | Single-Core Shielded Wire (Gray) (0.95m) | W11-018G | |
| – | Single-Core Shielded Wire (White) (0.4m) | W11-019G | |
| – | Vinyl Tube (Black) (0.1m) | W17-17 | |
| – | Double-Core Shielded Wire (0.3m) | W51-020 | |
| – | Pan Head Screw (⊕ P3 x 8 – F) x 11 | | |
| – | Pan Head Screw (⊕ P3 x 10 – F) x 8 | | |
| – | Pan Head Screw (⊕ P4 x 6 – F) x 5 | | |
| – | Pan Head Screw (⊕ P4 x 8 – F) x 4 | | |
| – | Flat Head Screw (⊕ S3 x 6 – F) x 9 | | |
| – | Nut (N3 – F) x 11 | | |
| – | Flat washer (W4 – F) x 9 | | |
| – | Case (M, S) | A01-CA61 | |
| | Case (W, E) | A01-CA616 | |
| – | Sub Panel (M, S) | A06-CA61 | |
| | Sub Panel (W, E) | A06-CA613 | |



www.hifiengine.com

| Symbol No. | Description | Part No. | Remarks |
|---|---|---|---|
| – | Back panel (M) | A09-CA612 | |
| | Back panel (S) | A09-CA618 | |
| | Back panel (E) | A09-CA616 | |
| | Back panel (W) | A09-CA616W | |
| – | Name plate (SEV Standard) (E) | B09-111 | |
| – | Plug (E, W) | E10-26 | |
| – | Cord Band (E, W) | E4073 | |
| – | Cord Bushing (M, E. W) | G11-01 | |
| | Cord Bushing (S) | G11-18 | |
| – | Instruction (AC VOLT SELECT) (S) | H4143 | |
| – | Instruction (POWER CIRCUIT) (E) | H4175 | |
| – | Instruction (M, W) | H4190 | |
| – | Instruction (M, W) | H4191 | |
| – | Screw (for Terminal) (M, S) | N11-47 | |
| | Screw (for Terminal) x 2 (E. W) | N11-47 | |
| – | Switch Stopper (M, S, W) | S4103 | |
| P.T | Power Transformer (M, E, W) | T01-166W | |
| | Power Tr ansformer (S) | T01-166X | |
| – | AC Cord (with plug) (M) | W09-01 | |
| | AC Cord (SEV Standard) (2m) (E, W) | W10-06 | |
| | AC Cord (2m) | W12-030 | |
| – | Pan Head Screw (⊕P3 x 6 – F) x 37 (M, W) | | |
| | Pan Head Screw (⊕P3 x 6 – F) x 35 (S, E) | | |
| – | Internal lock washer (KWI 4 – S) (M, S) | | |
| | Internal lock washer (KWI 4 – S) x 2 (E, W) | | |

Note

M: For AC110 ~ 120V/220 ~ 240V Sets (General export)
S: For AC230 ~ 250V Sets (South Africa)
E: For AC220 ~ 240V Sets (Europe)
W: For AC110 ~ 120V/220 ~ 240V Sets (Europe)



www.hifiengine.com

# CHASSIS TOP VIEW

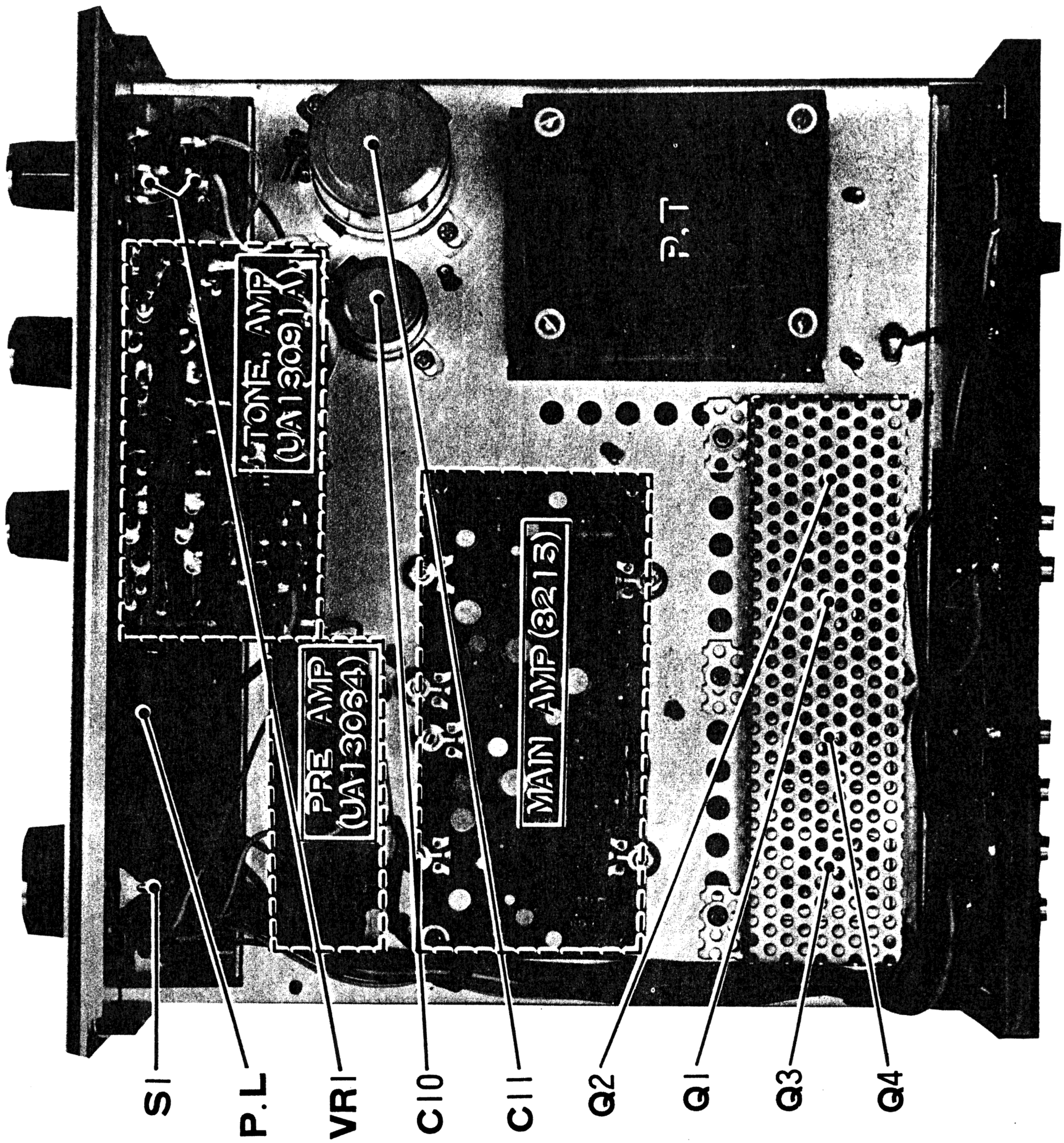




www.hifiengine.com

# CHASSIS BOTTOM VIEW

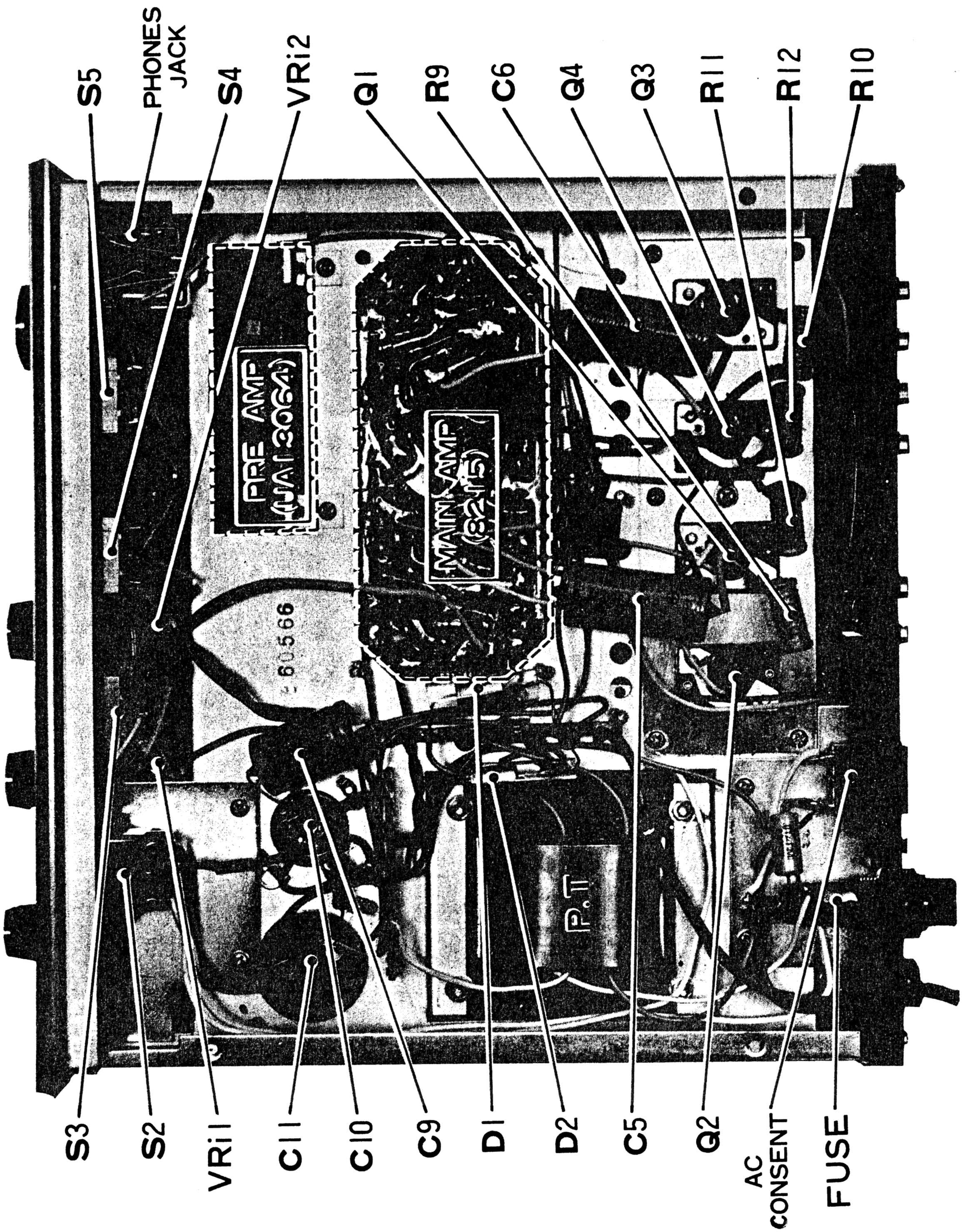

# PROCEDURE FOR REPLACING OUTPUT TRANSISTOR

**Symptoms:**

A. When there is load hum at the speakers.
B. When there is no output at all.
C. When you cannot get rated output.

**Replacing Method:**

Replace all the four transistors,
2SD91 (Sanken),
2N-1486 (RCA).

**Adjusting Procedures:**

Connect dummy load to output terminals, and connect to the oscilloscope input in parallel.

Inject 1,000 Hz audio signal from an audio generator with the level of 100 mV to the AUX terminals.

Advance the front panel volume control until the sine-wave just begins to clip on the oscilloscope.

Adjust DC balance control VRe1 (LEFT) or VRe2 (RIGHT) on the print board "8215" until clipping is symmetrical.

**Testing procedures:**

Until replacement is completed, do not operate the set the unit without first testing. Perform the test according to the following procedures.

1. Using variable transformer, lower the AC line voltage to approximately 30 volts.
2. Using a tester, measure the voltage between the chassis and Collector of the power transistor Q3 or Q2.
   If a tester indicates approximately 42 V, it is normal.
3. Also measure the voltage between the chassis and Collector of the power transistor Q4 or Q1.
   If a tester indicates approximately 21V, it is normal.

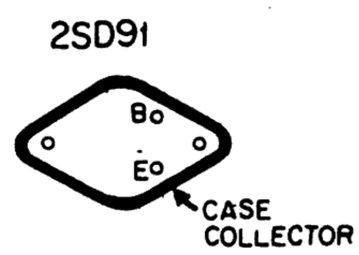


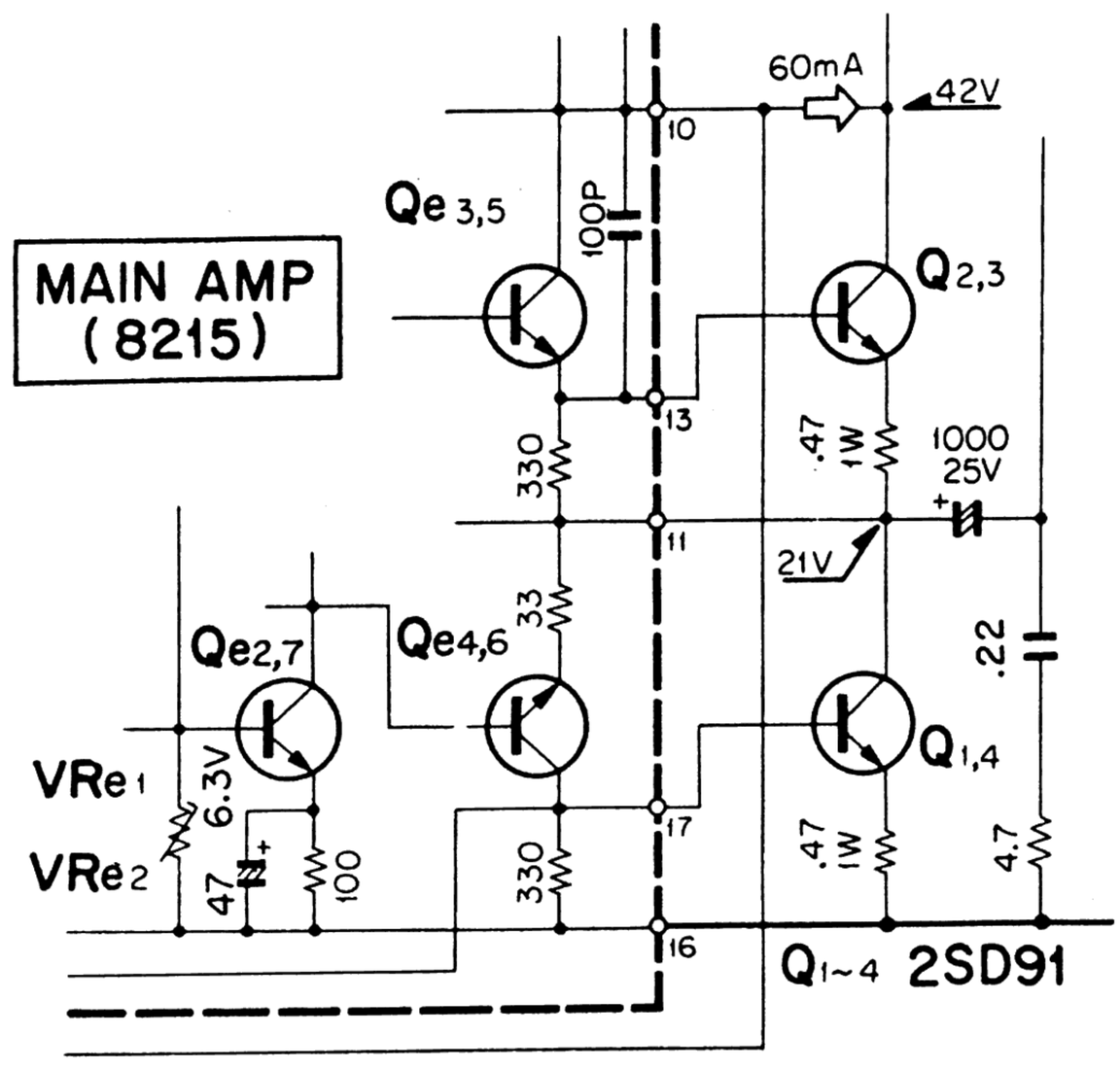


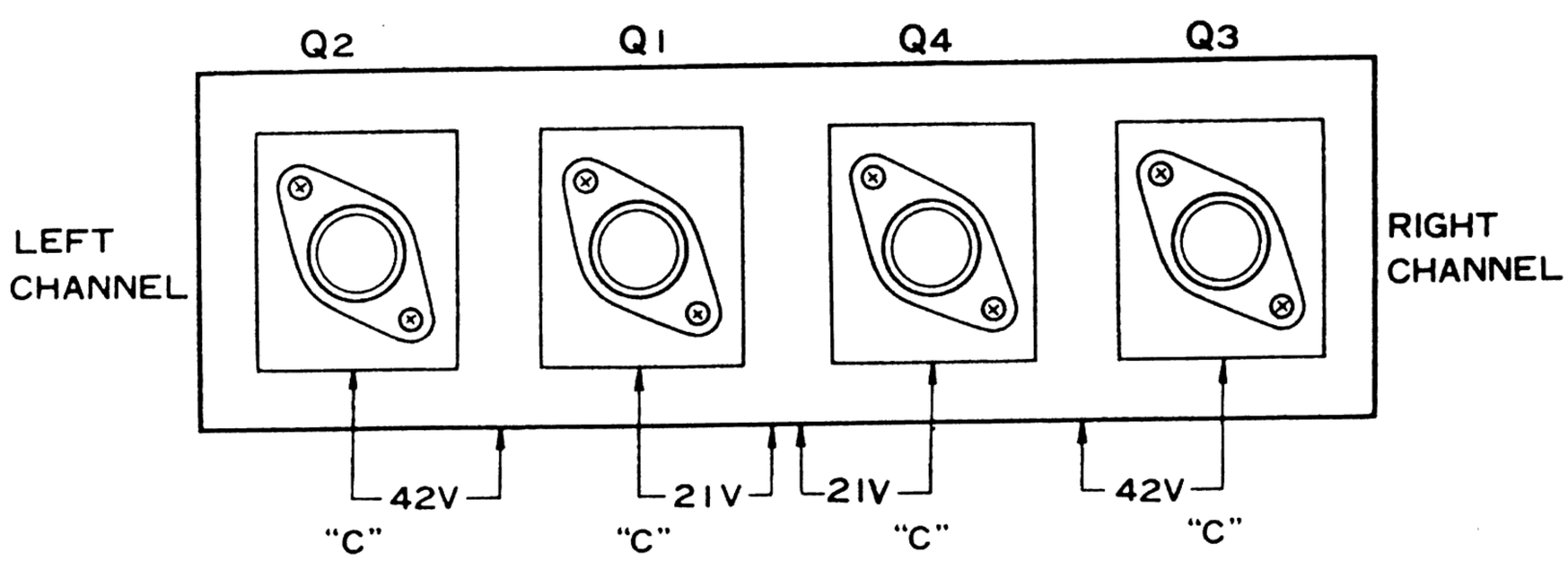




www.hifiengine.com

# SCHEMATIC DIAGRAM

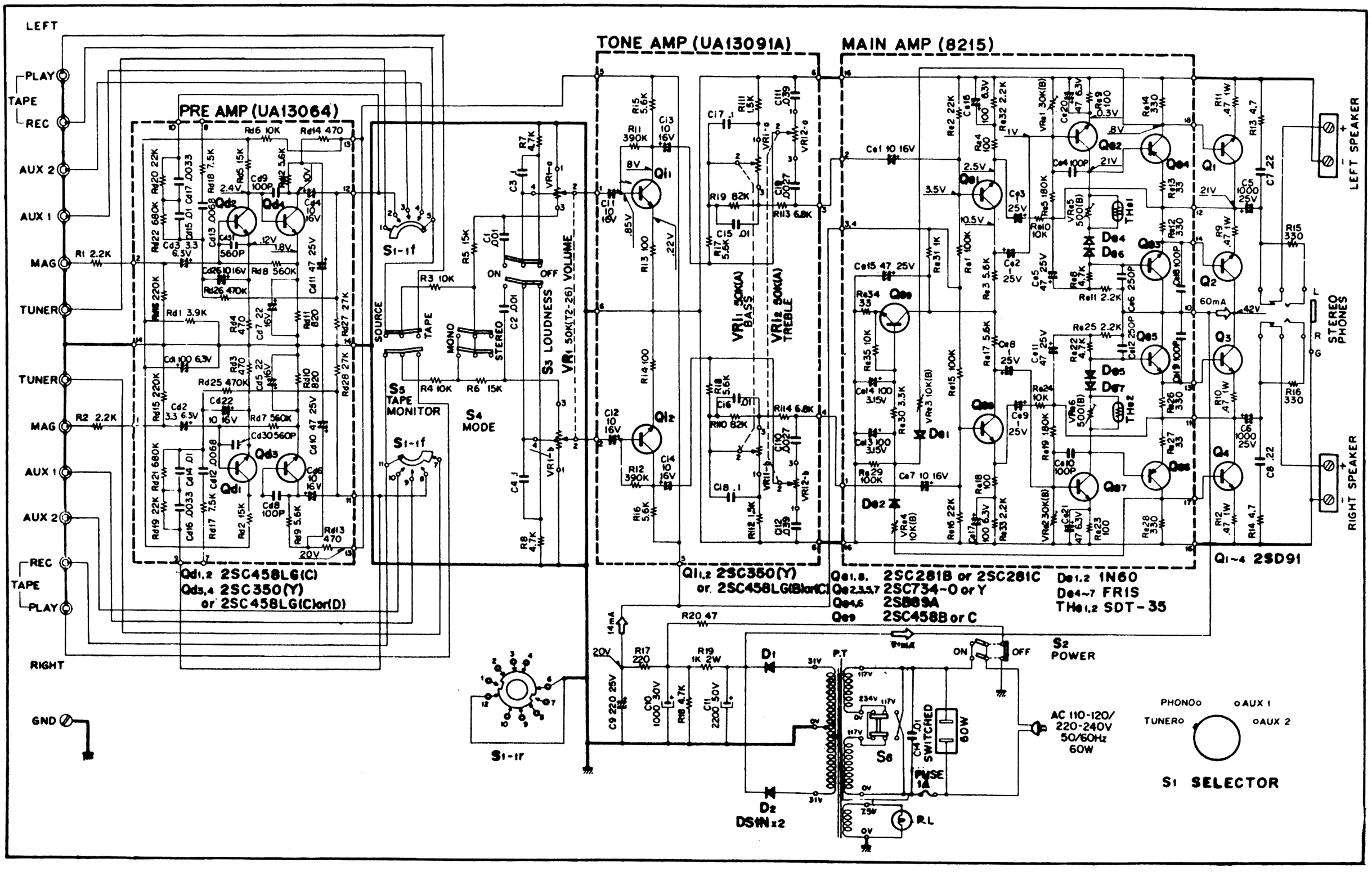


NOTE

The schematic diagram above is for the sets made for operation in AC 110-120 V 220-240 V power source areas. Revised power transformer circuits for those receiver made to accept different power source voltages are shown at the right.

We reserve the right to make modifications in this model in accordance with technical developments.

## For AC 220-240V Sets

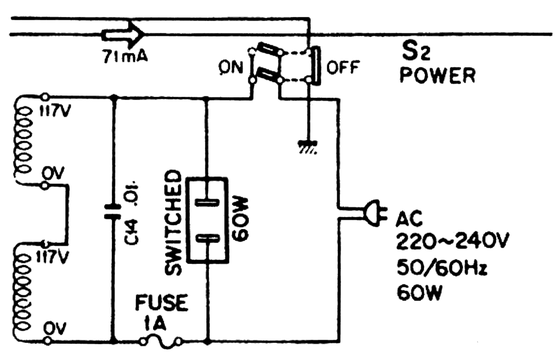


## For AC 110-120V Sets

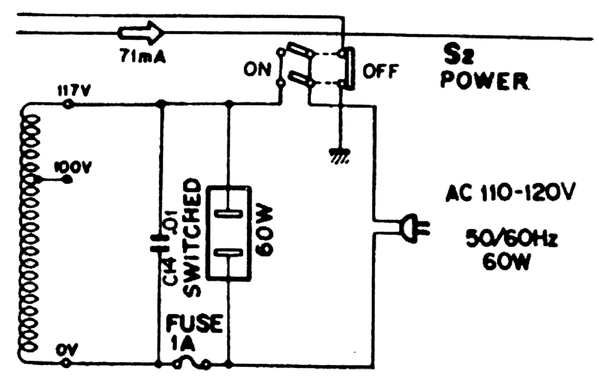


## For AC 230V/240-250V Sets

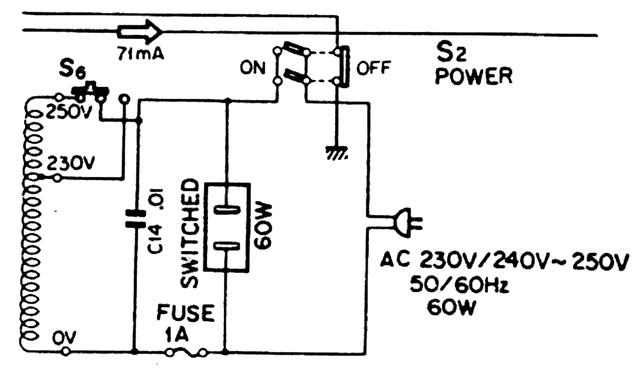

## SCHEMATIC DIAGRAM

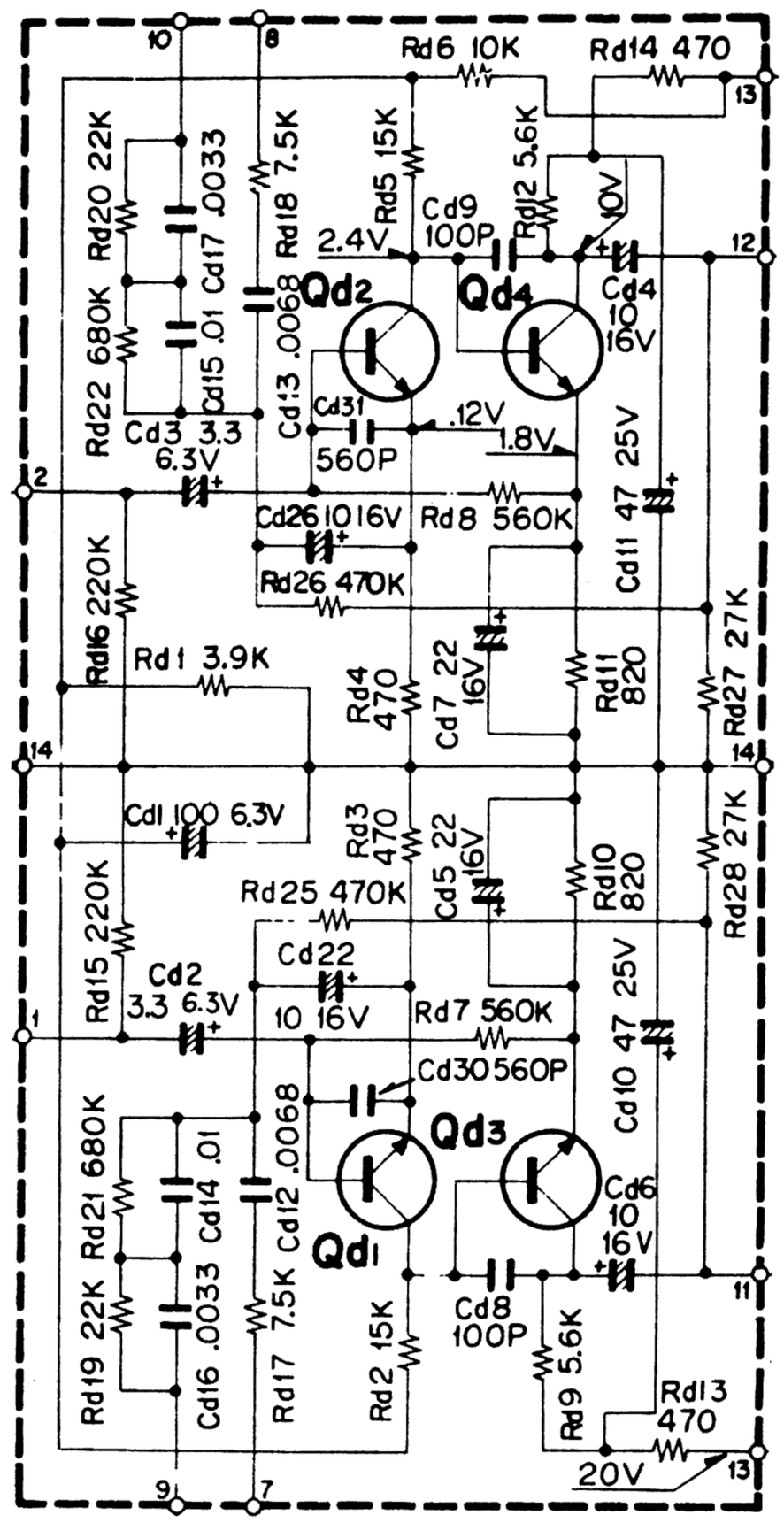


## BOTTOM VIEW OF TRANSISTOR

2SC350(Y)

2SC458LG(C)
2SC458LG(D)

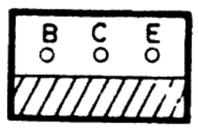


## SEALED CIRCUIT ASSEMBLIES-PHANTOM VIEWS

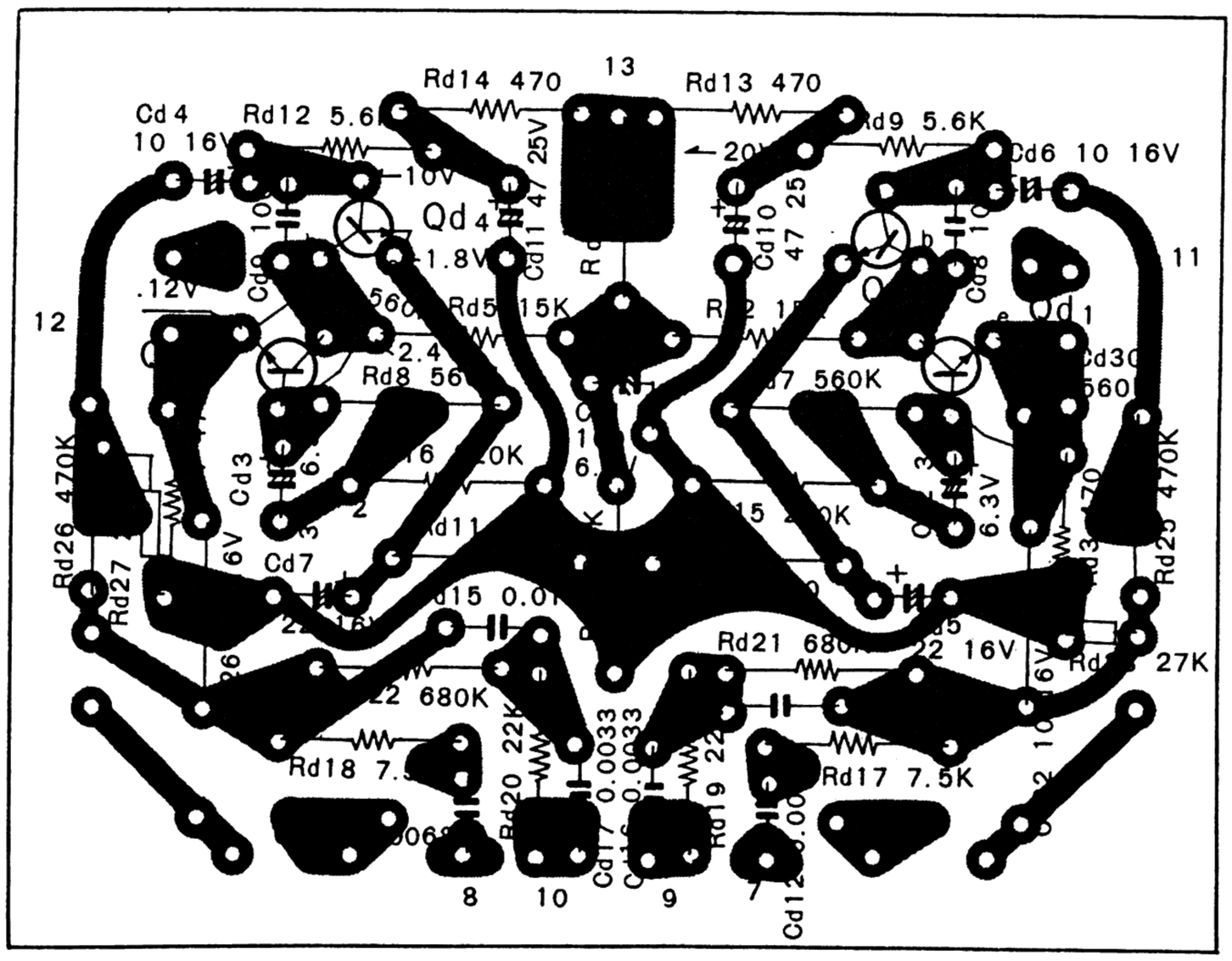


Qd 1,2 2SC458LG(C) Qd 3,4 2SC350(Y)

www.hifiengine.com

## PARTS DESCRIPTION LIST

| Symbol No. | Description | | | Part No. | Remarks |
|---|---|---|---|---|---|
| | **RESISTORS** | | | | |
| Rd1 | Special Insulated Carbon Film | 3.9KΩ | ±10% ¼W | | |
| Rd2 | Carbon (low noise) | 15KΩ | ±10% ¼W | | |
| Rd3, 4 | Special Insulated Carbon Film | 470Ω | ±5% ¼W | | |
| Rd5 | Carbon (low noise) | 15KΩ | ±10% ¼W | | |
| Rd6 | Special Insulated Carbon Film | 10KΩ | ±10% ¼W | | |
| Rd7, 8 | Carbon (low noise) | 560KΩ | ±10% ¼W | | |
| Rd9 | Special Insulated Carbon Film | 5.6KΩ | ±10% ¼W | | |
| Rd10, 11 | Special Insulated Carbon Film | 820Ω | ±10% ¼W | | |
| Rd12 | Special Insulated Carbon Film | 5.6KΩ | ±10% ¼W | | |
| Rd13, 14 | Special Insulated Carbon Film | 470Ω | ±10% ¼W | | |
| Rd15, 16 | Special Insulated Carbon Film | 220KΩ | ±10% ¼W | | |
| Rd17, 18 | Special Insulated Carbon Film | 7.5KΩ | ±5% ¼W | | |
| Rd19, 20 | Special Insulated Carbon Film | 22KΩ | ±5% ¼W | | |
| Rd21, 22 | Special Insulated Carbon Film | 680KΩ | ±5% ¼W | | |
| Rd25, 26 | Special Insulated Carbon Film | 470KΩ | ±10% ¼W | | |
| Rd27, 28 | Special Insulated Carbon Film | 27KΩ | ±10% ¼W | | |
| | **CAPACITORS** | | | | |
| Cd1 | Electrolytic Tubular | 100μF | 6.3WV | | |
| Cd2, 3 | Solid Aluminum Electrolytic | 3.3μF | 6.3WV | | |
| Cd4 | Electrolytic Tubular | 10μF | 16WV | | |
| Cd5 | Electrolytic Tubular | 22μF | 16WV | | |
| Cd6 | Electrolytic Tubular | 10μF | 16WV | | |
| Cd7 | Electrolytic Tubular | 22μF | 16WV | | |
| Cd8, 9 | Ceramic | 100pF | ±5% | | |
| Cd10, 11 | Electrolytic Tubular | 47μF | 25WV | | |
| Cd12, 13 | Mylar | 0.0068μF | ±10% | | |
| Cd14, 15 | Mylar | 0.01μF | ±10% | | |
| Cd16, 17 | Mylar | 0.0033μF | ±10% | | |
| Cd22, 26 | Electrolytic Tubular | 10μF | 16WV | | |
| Cd30, 31 | Ceramic | 560pF | ±20% | | |
| | **TRANSISTORS** | | | | |
| Qd1, 2 | 2SC 458LG (C) phono E.Q.Amp. | | | | |
| Qd3, 4 | 2SC 458LG (C) or (D) phono E.Q. Amp. | | | | |
| | **MISCELLANEOUS** | | | | |
| – | Printed Circuit Board | | | S23-128 | |
| – | Tinned Wire (0.8 φ) 0.07m | | | W03-08 | |
| – | Vinyl Tube 0.05m | | | W07-014 | |

www.hifiengine.com

## SCHEMATIC DIAGRAM

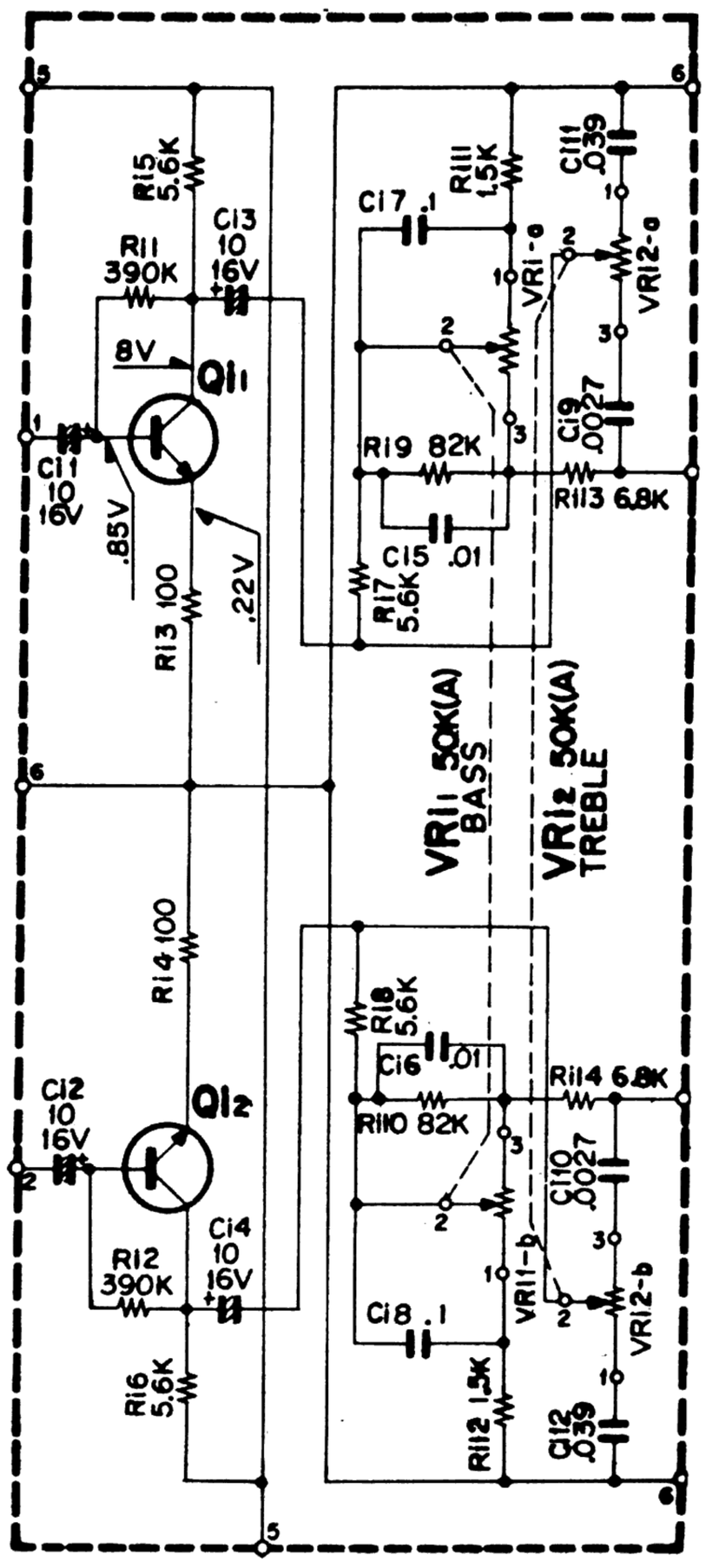


### BOTTOM VIEW OF TRANSISTOR

2SC350(Y)

2SC458LG(B)or(C)

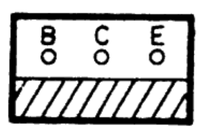


## SEALED CIRCUIT ASSEMBLIES-PHANTOM VIEWS

Qi1,2 2SC350(Y)

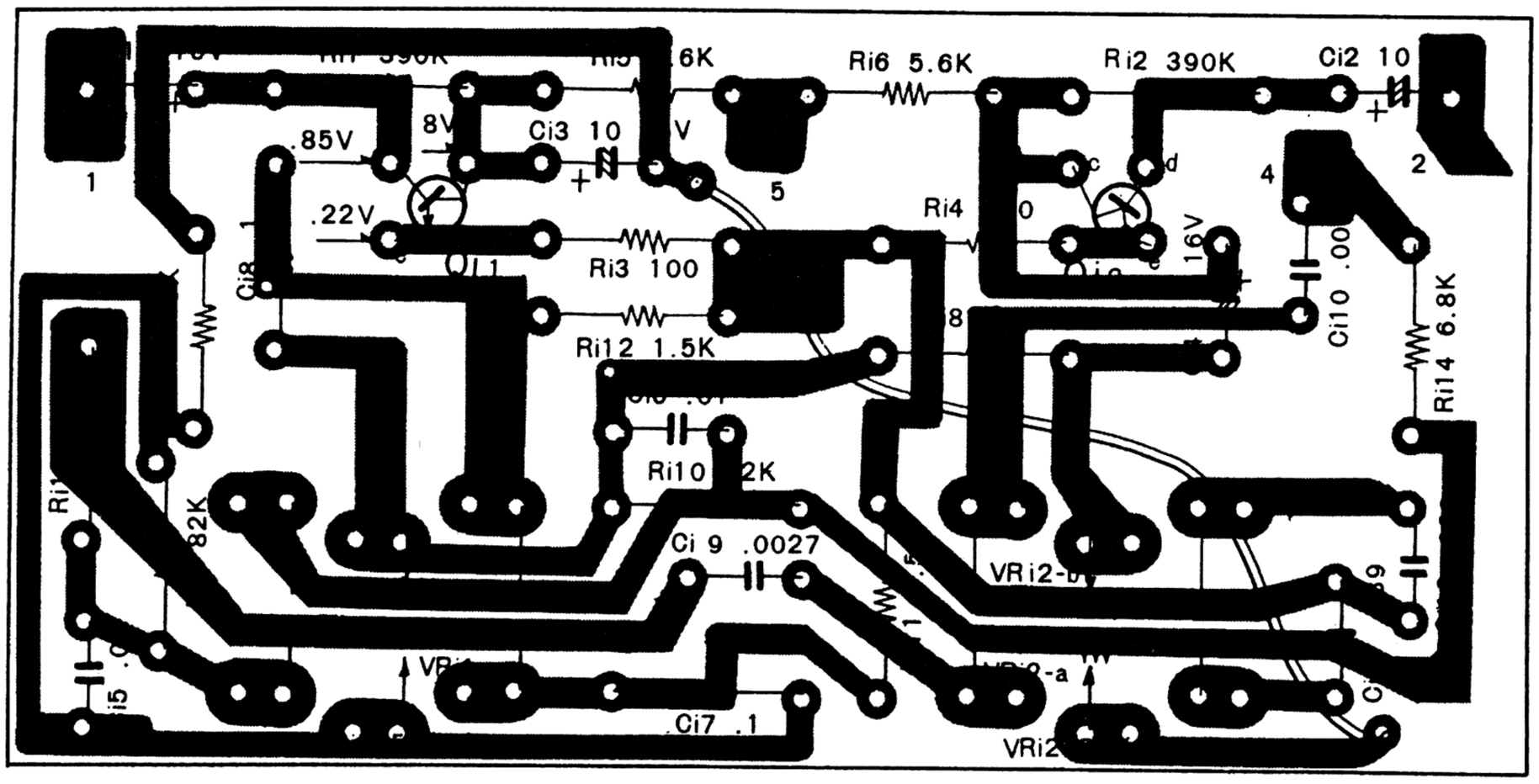

## PARTS DESCRIPTION LIST

| Symbol No. | Description | | | Part No. | Remarks |
|---|---|---|---|---|---|
| | **RESISTORS** | | | | |
| Ri1, 2 | Special Insulated Carbon Film | 390KΩ | ±10% ¼W | | |
| Ri3, 4 | Special Insulated Carbon Film | 100Ω | ±10% ¼W | | |
| Ri5 ~ 8 | Special Insulated Carbon Film | 5.6KΩ | ±10% ¼W | | |
| Ri9, 10 | Special Insulated Carbon Film | 82KΩ | ±10% ¼W | | |
| Ri11, 12 | Special Insulated Carbon Film | 1.5KΩ | ±10% ¼W | | |
| Ri13, 14 | Special Insulated Carbon Film | 6.8KΩ | ±10% ¼W | | |
| | **CAPACITORS** | | | | |
| Ci1 ~ 4 | Electrolytic Tubular | 10μF | 16WV | | |
| Ci5, 6 | Mylar | 0.01μF | ±10% | | |
| Ci7, 8 | Mylar | 0.1μF | ±10% | | |
| Ci9, 10 | Mylar | 0.0027μF | ±10% | | |
| Ci11, 12 | Mylar | 0.039μF | ±10% | | |
| | **POTENTIOMETERS** | | | | |
| VRi1 | 50KΩ (A) x 2 BASS | | | R02-0166 | |
| VRi2 | 50KΩ (A) x 2 TREBLE | | | R02-0166 | |
| | **TRANSISTORS** | | | | |
| Qi1, 2 | 2SC458LG (C) TONE CONTROL DRIVE | | | | |
| | **MISCELLANEOUS** | | | | |
| — | Printed Circuit Board | | | S23-171 (B) | |
| — | Vinyl Tube 1φ (0.02m) | | | W07-014 | |
| — | P.V.C. Insulated Wire (Red) (0.08m) | | | W32-52 | |

www.hifiengine.com

## SCHEMATIC DIAGRAM

### BOTTOM VIEW OF TRANSISTOR

2SC281(B)
2SC281(C)

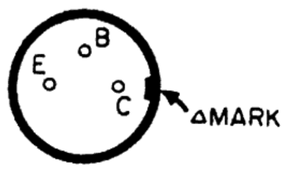


2SC734(O,Y)

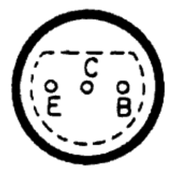


2SB89A

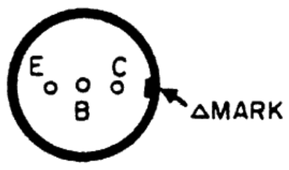


2SC458BorC

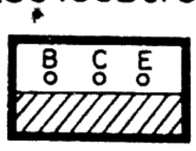


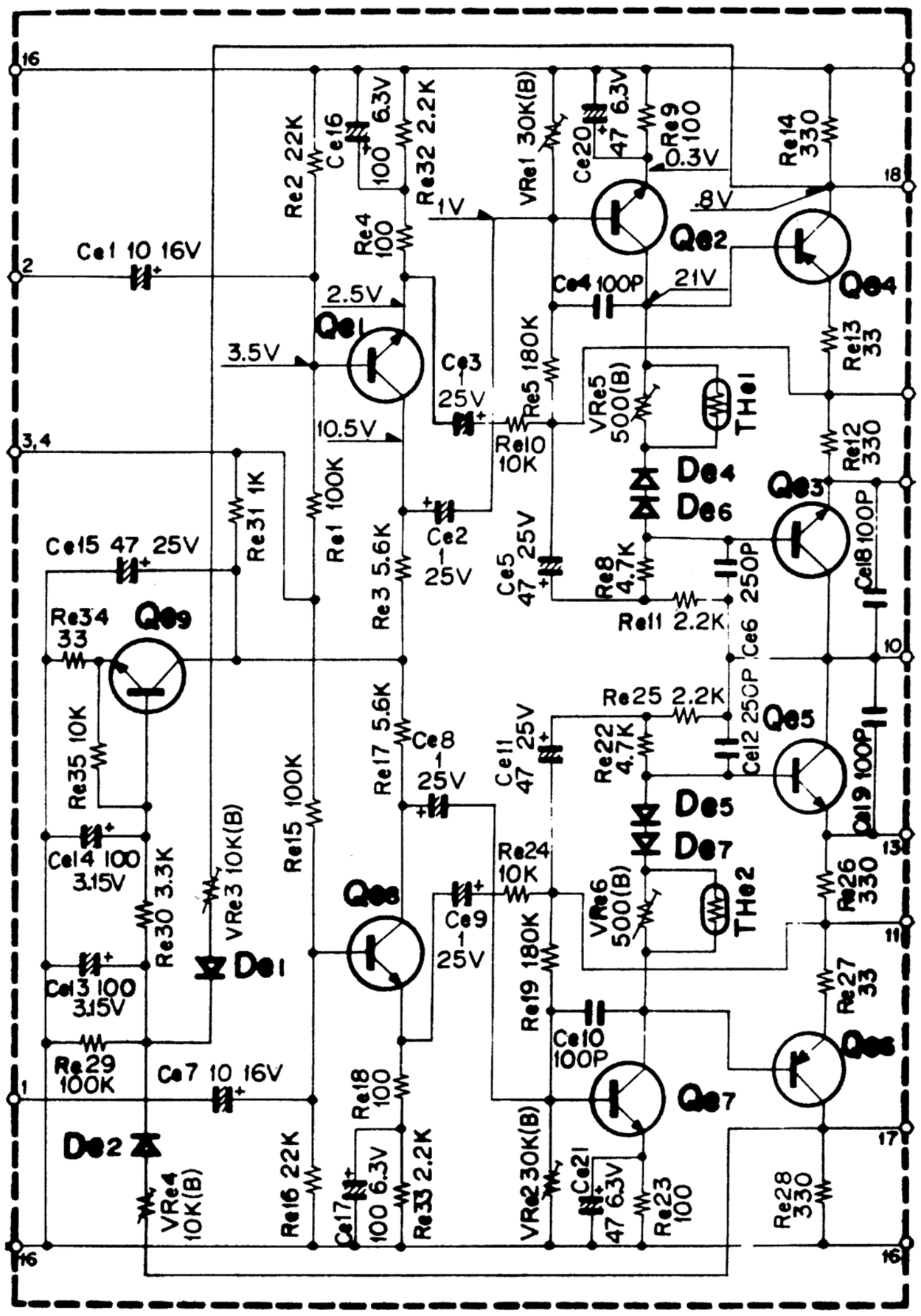


## SEALED CIRCUIT ASSEMBLIES-PHANTOM VIEWS

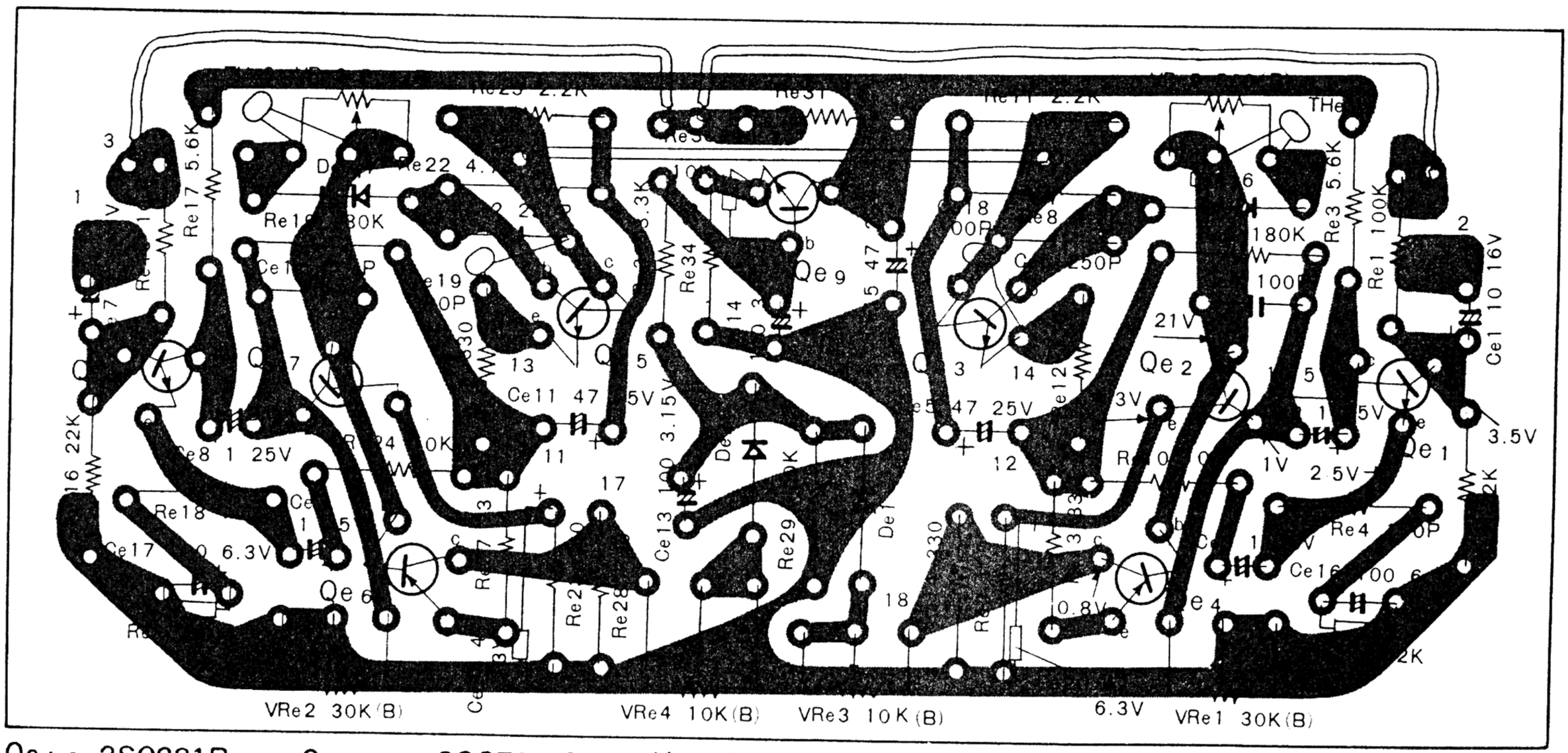


Qe1,8 2SC281B or 2SC281C  Qe2,3,5,7 2SC734-O or Y  Qe4,6 2SB89A  Qe9 2SC458B or C

De1,2 1N60 or SD46  De4~7 FRIS  THe1,2 SDT-35

www.hifiengine.com

## PARTS DESCRIPTION LIST

| Symbol No. | Description | | | Part No. | Remarks |
|---|---|---|---|---|---|
| | **RESISTORS** | | | | |
| Re1 | Carbon (low noise) | 100KΩ | ±10% ¼W | | |
| Re2 | Carbon (low noise) | 22KΩ | ±10% ¼W | | |
| Re3 | Special Insulated Carbon Film | 5.6KΩ | ±10% ¼W | | |
| Re4 | Special Insulated Carbon Film | 100Ω | ±10% ¼W | | |
| Re5 | Fixed Carbon Composition | 180KΩ | ±10% ½W | | |
| Re8 | Fixed Carbon Composition | 4.7KΩ | ±10% ½W | | |
| Re9 | Fixed Carbon Composition | 100Ω | ±10% ½W | | |
| Re10 | Fixed Carbon Composition | 10KΩ | ±10% ½W | | |
| Re11 | Fixed Carbon Composition | 2.2KΩ | ±10% ½W | | |
| Re12 | Fixed Carbon Composition | 330Ω | ±10% ½W | | |
| Re13 | Fixed Carbon Composition | 33Ω | ±10% ½W | | |
| Re14 | Fixed Carbon Composition | 330Ω | ±10% ½W | | |
| Re15 | Carbon (low noise) | 100KΩ | ±10% ¼W | | |
| Re16 | Carbon (low noise) | 22KΩ | ±10% ¼W | | |
| Re17 | Special Insulated Carbon Film | 5.6KΩ | ±10% ¼W | | |
| Re18 | Special Insulated Carbon Film | 100Ω | ±10% ¼W | | |
| Re19 | Fixed Carbon Composition | 180KΩ | ±10% ½W | | |
| Re22 | Fixed Carbon Composition | 4.7KΩ | ±10% ½W | | |
| Re23 | Fixed Carbon Composition | 100Ω | ±10% ½W | | |
| Re24 | Fixed Carbon Composition | 10KΩ | ±10% ½W | | |
| Re25 | Fixed Carbon Composition | 2.2KΩ | ±10% ½W | | |
| Re26 | Fixed Carbon Composition | 330Ω | ±10% ½W | | |
| Re27 | Fixed Carbon Composition | 33Ω | ±10% ½W | | |
| Re28 | Fixed Carbon Composition | 330Ω | ±10% ½W | | |
| Re29 | Fixed Carbon Composition | 100KΩ | ±10% ½W | | |
| Re30 | Fixed Carbon Composition | 3.3KΩ | ±10% ½W | | |
| Re31 | Fixed Carbon Composition | 1KΩ | ±10% ½W | | |
| Re32, 33 | Special Insulated Carbon Film | 2.2KΩ | ±10% ¼W | | |
| Re34 | Fixed Carbon Composition | 33Ω | ±10% ½W | | |
| Re35 | Fixed Carbon Composition | 10KΩ | ±10% ½W | | |
| | **CAPACITORS** | | | | |
| Ce1 | Electrolytic Tubular | 10μF | 16WV | | |
| Ce2, 3 | Electrolytic Tubular | 1μF | 25WV | | |
| Ce4 | Ceramic | 100pF | ±10% | | |
| Ce5 | Electrolytic Tubular | 47μF | 25WV | | |
| Ce6 | Ceramic | 250pF | ±10% | | |
| Ce7 | Electrolytic Tubular | 10μF | 16WV | | |
| Ce8, 9 | Electrolytic Tubular | 1μF | 25WV | | |
| Ce10 | Ceramic | 100pF | ±10% | | |
| Ce11 | Electrolytic Tubular | 47μF | 25WV | | |
| Ce12 | Ceramic | 250pF | ±10% | | |
| Ce13, 14 | Electrolytic Tubular | 100μF | 3.15WV | | |
| Ce15 | Electrolytic Tubular | 47μF | 25WV | | |
| Ce16, 17 | Electrolytic Tubular | 100μF | 6.3WV | | |
| Ce18, 19 | Ceramic | 100pF | ±10% | | |
| Ce20, 21 | Electrolytic Tubular | 47μF | 6.3WV | | |
| | **POTENTIOMETERS** | | | | |
| VRe1, 2 | 30KΩ (B) DC Bias | | | R10-55 | |
| VRe3 ,4 | 10KΩ (B) Protection Level Set | | | R10-54 | |
| VRe5, 6 | 500Ω (B) DC Bias | | | R10-46 | |
| | **TRANSISTORS/DIODES** | | | | |
| Qe1 | 2SC 281B or C | Left AF Amp. | | | |
| Qe2 | 2SC 734 (O. Y) | Left Driver | | | |
| Qe3 | 2SC 734 (O.Y) | Complementary | | | |
| Qe4 | 2SB 89A | Complementary | | | |
| Qe5 | 2SC 734 (O. Y ) | Complementary | | | |
| Qe6 | 2SB 89A | Complementary | | | |
| Qe7 | 2SC 734 (O. Y ) | Right Driver | | | |
| Qe8 | 2SC 281B or C | Right AF Amp. | | | |
| Qe9 | 2SC 458B or C | Protection | | | |
| De1, 2 | 1N60 | Protection | | | |
| De4 ~ 7 | FR1S | AF Rect | | | |
| THe1, 2 | SDT-35 | Stabilizer | | | |
| | **MISCELLANEOUS** | | | | |
| – | Printed Circuit Board | | | S23-96 | |
| – | Vinyl Tube 1.0φ (0.21m) | | | W07-014 | |
| – | P.V.C. Insulated Wire (0.29m) | | | W32-52 | |

www.hifiengine.com

TRIO

Manufactured by TRIO ELECTRONICS, INC., TOKYO, JAPAN.

www.hifiengine.com